The Plastic Film and Foil Web Handling Guide

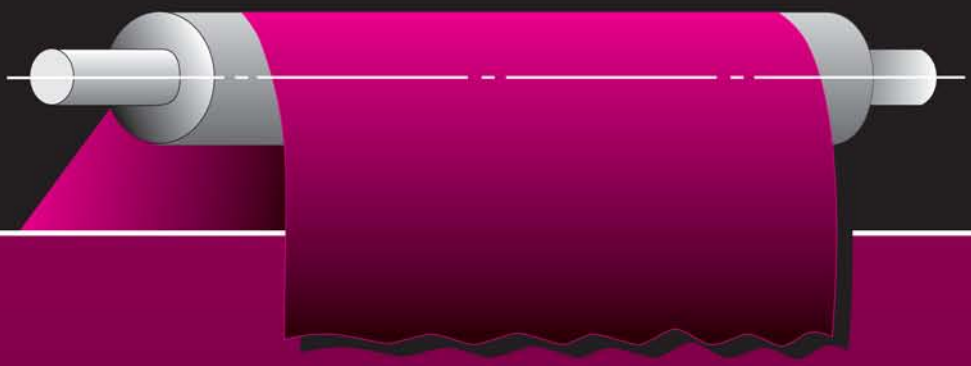

William E. Hawkins

CRC PRESS

The Plastic Film and Foil Web Handling Guide

The Plastic Film and Foil Web Handling Guide

William E. Hawkins

CRC PRESS

Boca Raton London New York Washington, D.C.

Library of Congress Cataloging-in-Publication Data

Hawkins, William E.
The plastic film and foil web handling guide / William E. Hawkins.
p. cm.
Includes bibliographical references and index.
ISBN 1-58716-152-4
1. Papermaking machinery. 2. Winding machines. I. Title.

TX1117 .H39 2002
621.8′6--dc21 2002073575

This book contains information obtained from authentic and highly regarded sources. Reprinted material is quoted with permission, and sources are indicated. A wide variety of references are listed. Reasonable efforts have been made to publish reliable data and information, but the author and the publisher cannot assume responsibility for the validity of all materials or for the consequences of their use.

Neither this book nor any part may be reproduced or transmitted in any form or by any means, electronic or mechanical, including photocopying, microfilming, and recording, or by any information storage or retrieval system, without prior permission in writing from the publisher.

The consent of CRC Press LLC does not extend to copying for general distribution, for promotion, for creating new works, or for resale. Specific permission must be obtained in writing from CRC Press LLC for such copying.

Direct all inquiries to CRC Press LLC, 2000 N.W. Corporate Blvd., Boca Raton, Florida 33431.

Trademark Notice: Product or corporate names may be trademarks or registered trademarks, and are used only for identification and explanation, without intent to infringe.

Visit the CRC Press Web site at www.crcpress.com

© 2003 by CRC Press LLC

No claim to original U.S. Government works
International Standard Book Number 1-58716-152-4
Library of Congress Card Number 2002073575
Printed in the United States of America 1 2 3 4 5 6 7 8 9 0
Printed on acid-free paper

Dedication

To my wife Carolyn, who gave up
considerable "together" time
while this book was being written.

Thank you for being so understanding!

Preface

A new way of analyzing web-handling problems is presented with the introduction of imaginary resistive tension member concepts. Guidelines are presented for roller alignment in machines, tensioning of webs, use of web spreading and guiding devices, use of razor slitters, shear knife slitters and edge trim removal. Guidelines are also presented for trim disposal and waste storage equipment. Management of electrostatic charges on webs is discussed. Winding technology is presented that addresses gage variation issues, cores and mandrels, vibration, speed issues, web thickness issues, web strength issues, coated web issues, laminated web issues, clear film issues, winding tension profile issues and lay-on roller issues. A guide for troubleshooting web-handling problems and a glossary of terms for quick reference material are presented.

This book is written to assist all people (managers, engineers, operators or maintenance workers) who work with webs directly or indirectly to better understand why webs behave the way they do when running through a web handling machine. I hope that this book becomes ready reference material for those who are involved in the web handling industry.

Contents

Section one

Chapter one Web stability **3**
Imaginary resistive tension member concept 3
Alignment requirements 5
Structure and stresses affect film web behavior 7
Tension limitations 17
Tension limitations with temperature 19

Chapter two Tension isolation **21**
Nip roller tension isolators 21
Three-roller nip systems 26
"S" wrapped driven rollers 27
Vacuum rollers 30
Vacuum belts 31

Chapter three Web tension measuring and control devices **33**
Web tension sensing 33
Dancer-roller systems 33
Load-cell rollers 36
Mass-free dancer sensing 37

Chapter four Web spreading **41**
Increased diameter under web edges 41
Concave rollers 43
Bowed spreader rollers 44
Air-bearing spreading 46
Angled opposed-edge nip rollers 46
Flexible-leaf spreading rollers 47

Chapter five Web guiding/steering **51**
Lateral shifting of the unwind and windup stands 51
Pivoting steering/guide rollers 55

Chapter six Static management **59**
Charge buildup theory 59
Static removal from webs 62

Section two

Chapter seven Slitting technology **67**
Razor-blade slitting 67
Bell or raised edges 67
Blade angles and configuration 70
Blade thickness and contamination generation 71
Blade oscillation 72
Slitting tension effects 73
Shear knife slitting 74
Shear knife setup 74
Overspeed settings 76
Other slitting techniques 78
Trim disposal 79
Trim chopping and shredding 84
Automatic trim and bleed trim thread up 88
Pneumatic trim disposal system 89
Shred- and chop-conveying pipes 91
Bypass air separation around grinder 92
Functions of the grinder 94
Sizing the blower 95
Fundamentals of the cyclone separator 95
Storage bins 96

Chapter eight Winding technology **99**
Affects of gage/caliper variation 99
Gage band randomization 101
Windup oscillation on casting machines 102
Unwind oscillation on converting machines 104
Cores and mandrels 106
Cores 106
Mandrels 108
Rigidity and vibration 109
Lay-on roller issues 114
Optimum thread path around lay-on roller, effects of eccentricity 114
Lay-on roll dynamics 115
Lay-on roll parameters 123
Winding tension/profiles by products and processes 127
Clear film issues 130
Winding with edge knurls 131

Laminated web issues 132
Web spreading during winding 135
Issues with coated low-strength films 135
Web strength issues 139
Speed issues 139

Section three

Chapter nine Troubleshooting web-handling problems 143
Wrinkle problems 143
Web-steering problems 146
Pucker problems on laminated webs 147
Scratch problems 148
Curl problems 150
Web flatness problems 150
Tin canning/MD wrinkles 152
An MD wrinkle theory 152
TD wrinkles 154
Slip pimples 155
Snail trails and other defects 155
Static management 156

Glossary 157

Appendix 169

Index 173

section one

chapter one

Web stability

Imaginary resistive tension member concept

It is easier to analyze the behavioral problems of running webs if the web is visualized as a matrix of material that has embedded in it a warp of very closely spaced threads or strings. Also, assume that the matrix is weak in compression in thin webs, but strong in tension, and that the primary purpose of the matrix is to hold the threads together. Further assume these closely spaced threads, running from beginning to end of the supply roll, determine the behavior of the web as it tracks over rollers and is acted on by environmental conditions. Think of these imagined threads as "tension members."

When the web is made from supple materials such as cloth or plastic and is relatively thin, the matrix and thread elements have very little stiffness so that each tension member must be pulled through the machine. The pulling force must come from tracking friction with the machine rollers, from a winding roll, or from forces of its neighbor(s) that are acting in tension through the web material matrix. When viewed in this way, these types of tension members can be thought of as the only opposing force to the forwarding traction forces being supplied by the machine rollers. Thus, in thin webs of pliant materials, the very narrowly spaced threads may be considered to be "imaginary resistive tension members" (IRTMs). (See Figure 1.1.)

Thick webs of flexible material and thin webs of stiff material exert some compressive force because of their stiffness. Stiffness varies with the third power of thickness in web materials. This property allows thicker webs to process with fewer wrinkle problems than thinner webs of the same material because it reduces the degree of accuracy of alignment that is necessary between the IRTMs and the machine rollers. Figures 1.2 and 1.3 illustrate the forces acting on two imaginary resistive tension members, which may approach the tracking roller at the same time in different locations across the web width. (For convenience throughout this book, the term "imaginary resistive tension member" (IRTM) will be shortened to "resistive member" (RM).

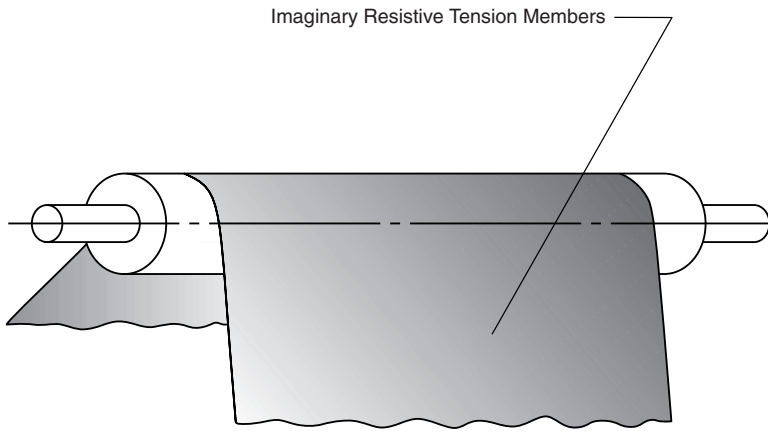

Figure 1.1 Imaginary resistive tension member concept.

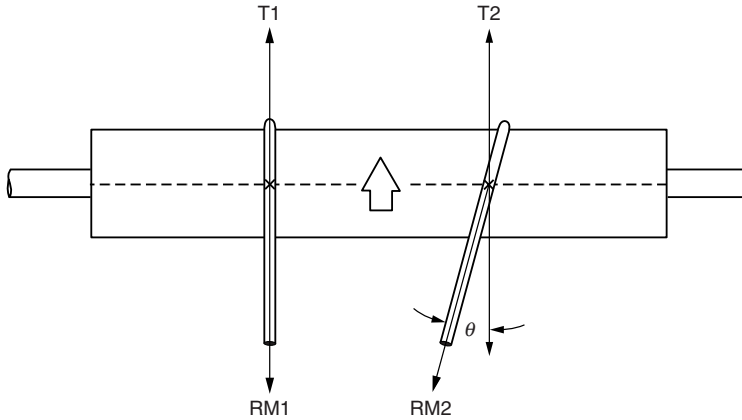

Figure 1.2 Imaginary tension member approach angles.

Figure 1.3 Tracking force vectors at touchdown.

Often both aligned and non-aligned RMs are exhibited in the same web at different locations across its width. Non-flat webs, such as skewed webs or webs with baggy centers or baggy edges, can cause this phenomenon. When the RM is aligned with the "tracking roller force vector" (T) as shown on the left of Figures 1.2 and 1.3, RM does not try to change its traveling direction on the process roller. When RM is non-aligned with the tracking roller force vector as shown on the right of Figures 1.2 and 1.3, a lateral moving force is introduced that attempts to move RM to the left. The amount of lateral force generated depends on the amount of friction of the roller to the web and the magnitude of the non-alignment angle.

The non-aligned forces shown in Figures 1.2 and 1.3 will also act on thick and stiff webs and influence their tracking line through the machine. When the non-alignment is severe, thick or stiff webs and board materials will track in the direction of the vector sum of the tracking friction misalignment components. Not all non-aligned RMs track in the same direction because the tracking angle may vary, yet each has an effect on the web. Thus, the sum of the non-aligned lateral tracking vectors determines which way the web will move. Hence, successful web handling begins with acceptable alignment of all the machine rollers.

Alignment requirements

The absolute accuracy necessary for aligning machine rollers varies with the stiffness of the product to be processed by the machine. Webs with little or essentially no stiffness require the most accurate machine roller alignment, while stiffer webs will operate satisfactorily with less accurate alignment.

Machine alignment begins with choosing a reference roller to which all other rollers in that section of the machine will be axially aligned. This roller is usually fixed in location in the machine, has some main function in the process, such as heating or cooling the web, and will not be changed frequently. A laminating cooling roller and a web heating drum are examples that may be used for reference rollers. When the machine consists of many sections, a reference roller for each section must be designated and aligned to a master reference roller with the same accuracy that each roller in each section is aligned to its reference roller.

Optical alignment is preferred for web-handling machines. For machines up to 20 ft wide, acceptable roller alignment accuracy for most webs is when all machine rollers are within 0.0005 in./ft. length of the reference roller in elevation and plan views. There usually is some random variance of non-alignment of section rollers with the reference roller, so the variation in alignment of RMs within any web obviates a more accurate alignment of the section rollers with the reference roller, and only in special cases would the extra cost be worth the results. Web guides and spreading rollers will usually keep the web flat and in the desired path if the section rollers are installed with the above precision.

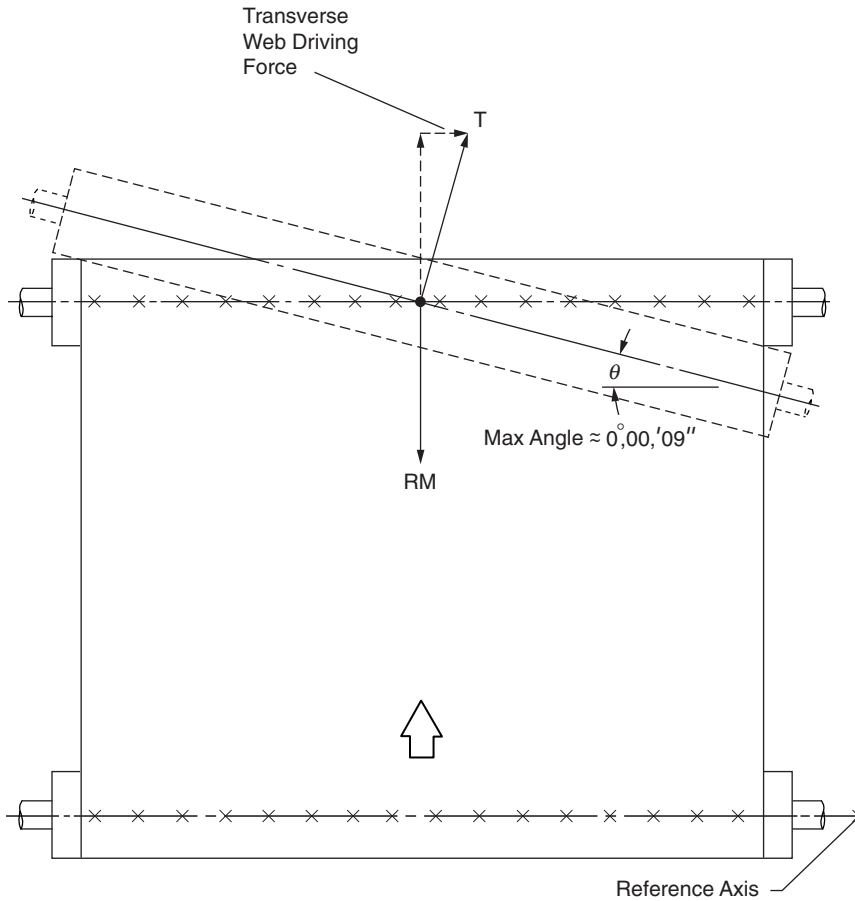

Figure 1.4 Minimum alignment for web rollers.

In most cases, web-handling machines should not be designed with several rollers equipped with adjustable bearing blocks that allow the operator to move section roller axes out of true alignment. The reason is that moving the rollers out of alignment to tighten the loose web may work for one set of web/roller conditions but will probably not be acceptable for the next supply roll and will require another round of adjustments for the next set of conditions. Multiple adjustments increase alignment errors, which diminishes acceptable alignment for all products and causes excessive product waste and machine downtime.

Sometimes a non-flat (distorted) web is the result of a particular process. Such rollers are often viewed as an acceptable solution to keep the web moving through the machine without wrinkles. These rollers should be installed with calibrated micrometer adjustment slides that allow the operator to quickly return all adjustable rollers to the optically aligned position with precision. Troubleshooting poor tracking and wrinkle formation problems is much easier when there is no alignment question.

Often, after a maintenance shutdown, a Pi tape and a 12–in. base machinist level may be used to check the accuracy of a replaced roller. This is an expedient method of getting back on production. There is, however, some risk in this approach in that the roller or rollers with which the alignment is being compared may be at the maximum tolerance or even slightly out of alignment tolerance, and with this method's tolerance limitation, the replaced roller could be well outside the alignment tolerance limits. As a result, wrinkles or poor tracking may occur on the replaced roller. Also, several Pi tape readings must be taken in increments across the newly installed roller face to get an accurate reading.

Sometimes the machine downtime required to do an accurate job is deemed excessive for certain processes, and the replaced roller is not adequately aligned. This risk can be eliminated by carefully pinning all pillow block bearings that hold the rollers in the web-handling machine frame after the machine has been optically aligned. Rollers with correctly pinned bearing blocks can be replaced without checking the alignment each time a roller is replaced.

Structure and stresses affect film web behavior

Even when roller alignment is completely within good web-handling tolerances, guiding devices are usually necessary to keep the web straight in the machine, especially in machines with many sections. There are exceptions, of course. When there are very true machine direction (MD)-oriented RMs in the web, the machine has been exceptionally aligned, the web is fairly stiff, and the process does not distort the web, the web may run true through the machines without guide rollers. However, all of these circumstances rarely occur at the same time. Normally, there are forces acting on the web, either on the surface or internally in the matrix, that cause the RMs in the web to pull at an angle other than perpendicular to the tracking roller axis.

A basic understanding of how tension distorts the RMs in a web is necessary for troubleshooting web-handling problems in any machine. Most plastic film webs are considered elastic in a small region of their stress/strain curve. A yield point is usually not easily defined by looking at the curve. Usually, the yield point of a particular product is an agreement of the technical community that works with that product. For example, the yield point for polyethylene terephthalate (PET) films is agreed to be 3% of the material elongation. When the web tension is kept below the yield point, one can fairly accurately predict the changes that will occur in the web matrix.

Figure 1.5 shows two aligned rollers that are spaced apart creating a web span. When one of these rollers applies a braking force and the other applies a pulling force, the web narrows in the span. The longer the span between the rollers at any fixed tension, the narrower the center of the span. Additionally, the larger the tension produced by the two rollers in any fixed span, the narrower in the center of the span.

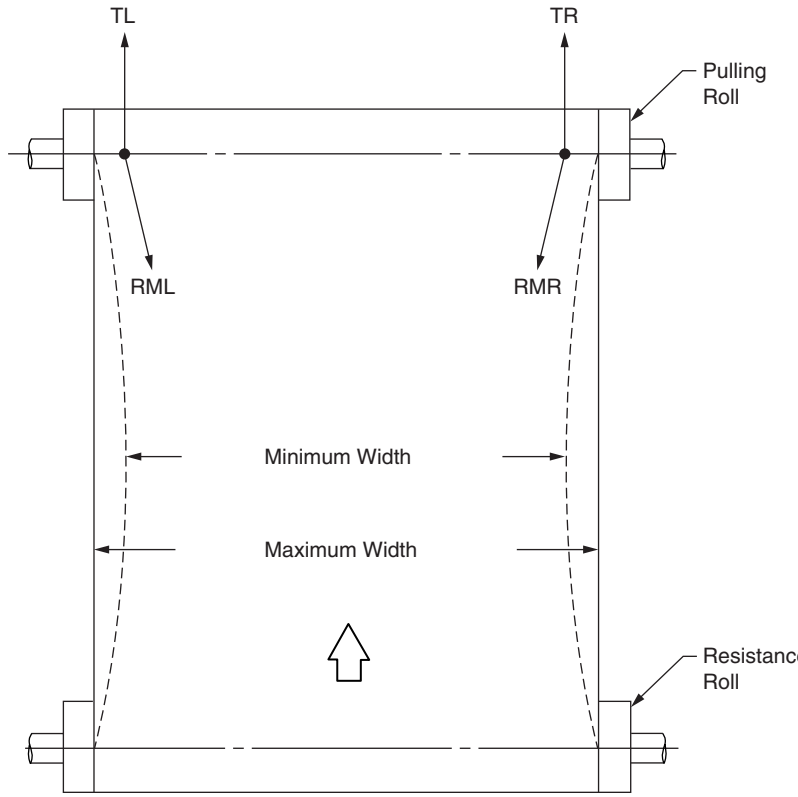

Figure 1.5 Converging approach angles due to tension.

The plan view shape of the web in the span resembles a center plane that is cut through an hourglass as illustrated by dotted lines (Figure 1.5). As the web advances toward the pulling roller, the approach angle of the RMs toward the outside edges are rotated inward toward the web centerline. Rotation of the outside RMs create inward lateral tracking forces in the web toward the centerline and the web narrows on the pulling roller.

When the web narrows in this fashion, the web folds in transverse direction (TD) column fail to form an undulating pattern as shown in section A-A at the bottom of Figure 1.6. Thus, webs that are not stiff enough to resist the narrowing tracking forces caused by tension often develop MD wrinkle patterns in spans between support rollers.

The fact that both web tension and length of web span between rollers contribute to the web-narrowing process, thread path design in other than simple machines becomes more complicated. For example, in a long drying oven where ambient air temperature reduces the yield point stress of the web, idler rollers usually are closely spaced to keep web spans short. The shaves of these rollers are frequently driven at line speed, "tendency driven," to reduce the tension required of the web to turn the rollers and ultimately

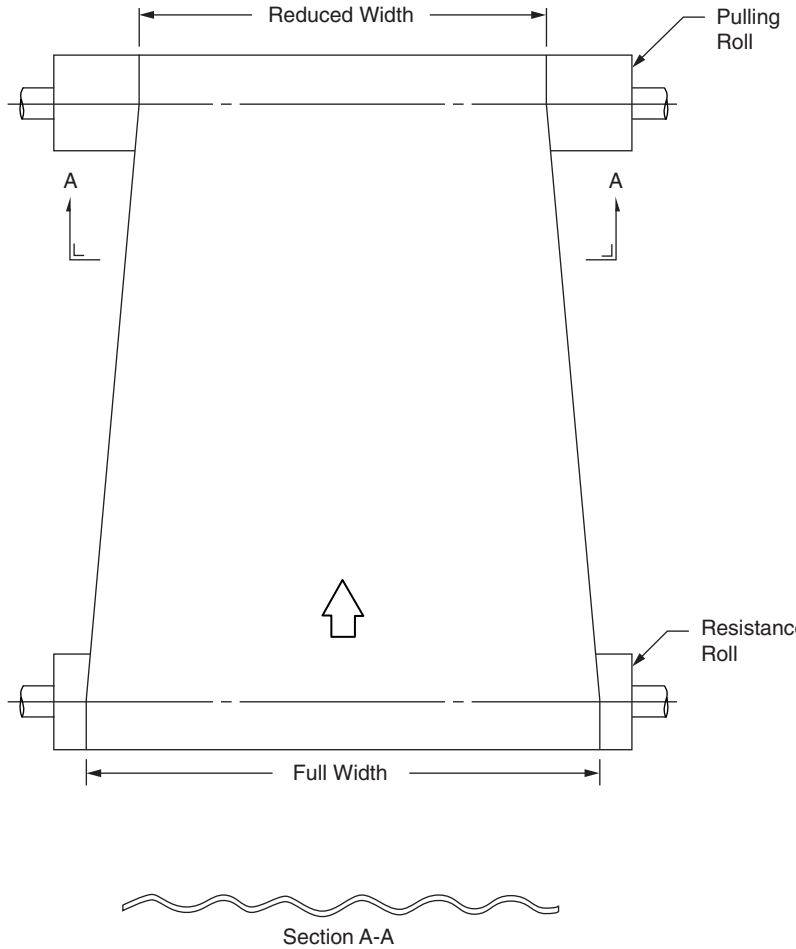

Figure 1.6 Narrowed web width on pulling roller.

pull the web through the machine. Many modern drying ovens support the web through their entire length with top and bottom air curtains in a serpentine fashion to reduce web-processing tension and the complication of tendency driven idler rollers. Even though these types of air-supported ovens remove the roller friction, they do not eliminate MD web tension caused by the opposing air curtains. Air pressure on the opposing air curtains must be very carefully controlled with very weak webs.

As mentioned, film webs often are not composed of parallel RMs completely across the web width. Sometimes this is because the web was made with longer RMs in some places, and sometimes the web is distorted by later processing. When the RMs are progressively longer from one side to the other, the web is said to be skewed. Skewed film webs form arcs of circles when they are spread out flat on a level surface. (See Figure 1.7.)

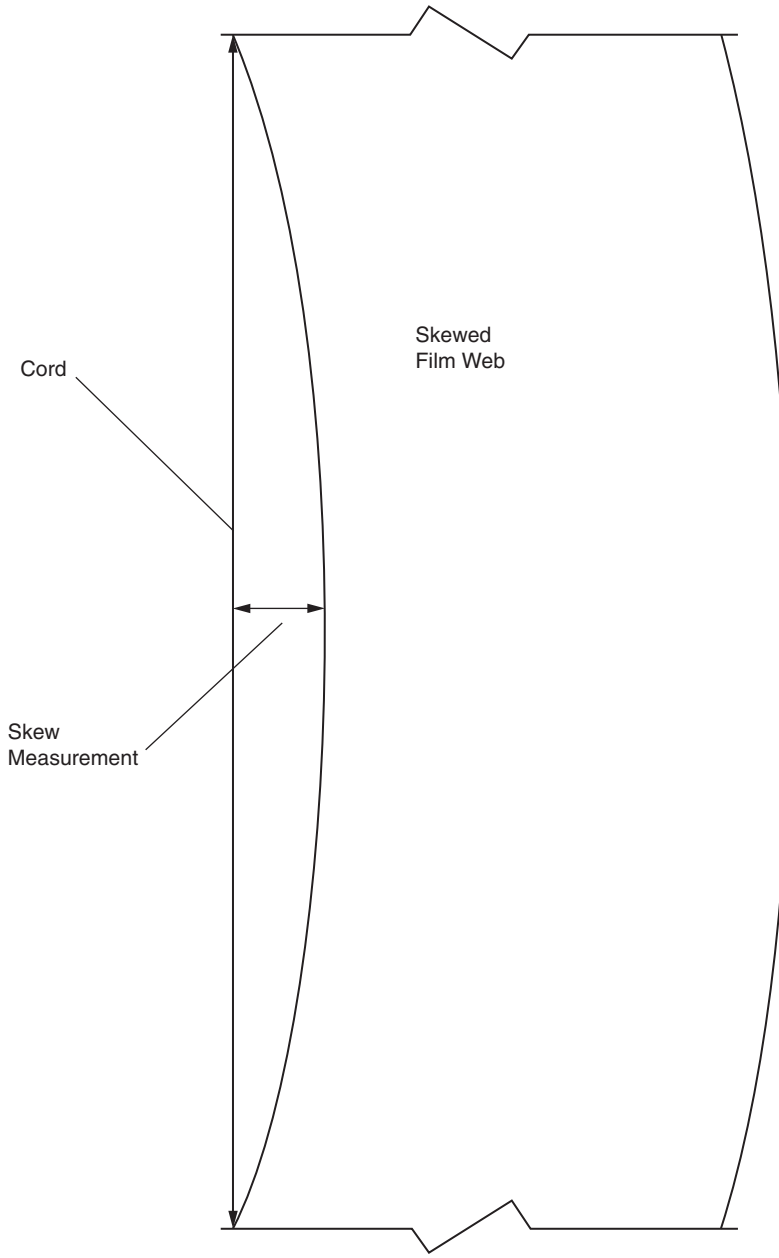

Figure 1.7 Technique for measuring web skew.

The magnitude of the skew is determined by measuring the distance that the film web edge is from the center of the cord line on the inside arc formed by the web. An accepted standard length of film web for skew measurement in this test is 50 ft. Film webs with greater arc diameters have

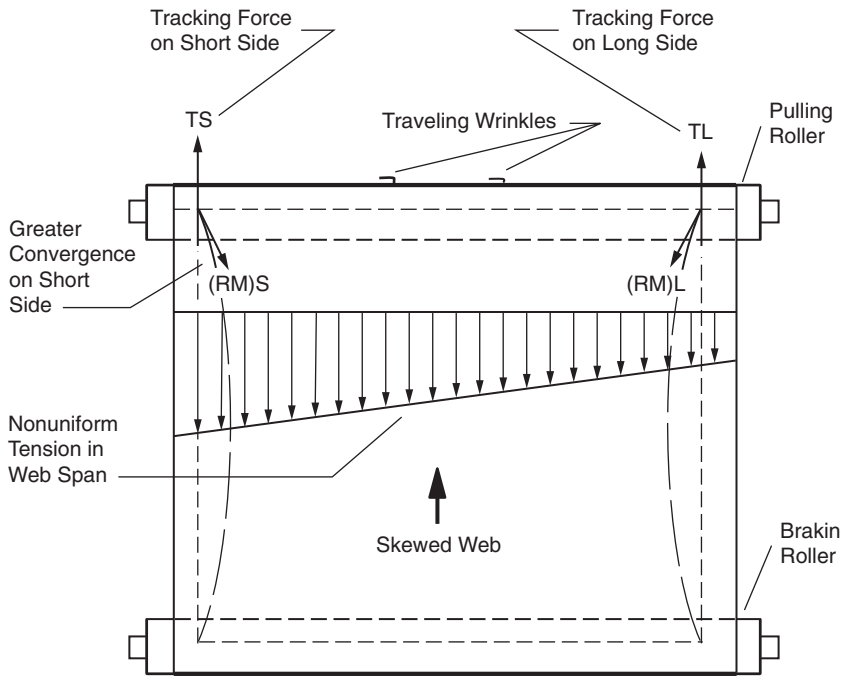

Figure 1.8 Origin of traveling wrinkles on rollers.

smaller skew numbers. This measuring technique is not very precise and great care must be exercised to prevent biased measurement. A typical good skew number range for $^1/_2$ mil PET film is $^1/_4$ to $^1/_2$ in.

Tension applied to a web that has skew creates an uneven tension profile across the film web. The greater the skew number, the more uneven the tension profile. As tension is increased in a pliant film web that contains skew, traveling wrinkles may form over the pulling roller. Wrinkles form when the short side of the web tries to track toward the web centerline and the web is not stiff enough to prevent column failure in compression.

Figure 1.8 illustrates how the RMs on the tight (short) side converge severely upstream. Lateral tracking forces become weaker toward the right side of the figure. Sometimes a wrinkle will form and the portion of the web that experiences the unbalanced lateral tracking forces moves toward the right to a position on the pulling roller where the tracking and RMs lateral forces are balanced. This occurs because the web has folded over and caused the approach angles of the RMs to shift back toward the outside.

As the lateral forces become balanced, further incentive for the wrinkle to travel is negated. When this happens, the wrinkle runs stable at this location on the pulling roller. Often wrinkles form, move, and then disappear only to reform again. When this is occurring, the lateral tracking forces are

just at the threshold of forming traveling wrinkles. When the web is stiff enough to resist foldover from the lateral tracking forces, the entire web simply shifts until the lateral tracking forces are balanced by the reoriented RMs, and the web usually remains stable in the new location.

Skew can also cause MD wrinkle problems on the windup roll. This happens when the operator attempts to tighten the loose side of the web by increasing winding roll tension. Figure 1.9 shows how the skewed tension profile creates more narrowing and a more angled approach of the RMs on the tight side. The tight side forms hard MD wrinkles under the increased tension, because the web tight edge tries to track inward on the roller, and the web collapses in column failure.

Sometimes webs have uniform length RMs for most of the width, but the outside edges will be longer, and the web is said to have baggy edges. Sometimes the baggy edge is only on one side of the web. Figure 1.10 shows an arbitrary tension profile of a one-sided baggy-edge web.

When the web has excessive skew or baggy edges, little can be done mechanically to run a web through the converting process without wrinkle problems. Sometimes thermoplastic webs can be straightened and flattened by heating the web above the glass transition point while holding the web with lateral and machine direction restraints, and then cooling the web below the glass transition point while still maintaining those restraints. This film straightening can be done in an oven equipped with chains that have clips that hold the web edges as the web moves through heating and cooling zones.

The chain rails should have joints that allow for adjustment to converge or diverge in the oven's various heating and cooling sections. Flow from the cooling nozzles must be adjustable so that the cooling rate may be profiled across the web width. This is important when trying to eliminate skew in a "tenter-frame" type machine. You can make the web straight by following a simple rule for long chain polymer materials: *Film that is hotter longer will be shorter when cooler.* Web RMs can be oriented in the same direction and adjusted to nearly the same length across the full web width by experimenting with the cooling-zone flow profiles.

Another way that the web may be straightened is to use a hot/cold roller machine, which consists of a heated drum and a cooling drum. The web must be nipped onto the heated drum surface at the touchdown point and the cooling drum at the debarkation point. The web is "S" wrapped around the two drums to give maximum dwell time on the two surfaces.

While the hot/cold roller machine may be the simpler of the two machines and there is little waste on the edges, it is a more difficult process to use than the tenter oven. The problems mainly involve the hot roller. One problem is lateral thermal growth on the hot roller that often develops into permanent wrinkles. Another problem is keeping the web away from the hot roller when the machine is not running because the web tends to stick to the hot roller surface when the web temperature approaches the glass transition point.

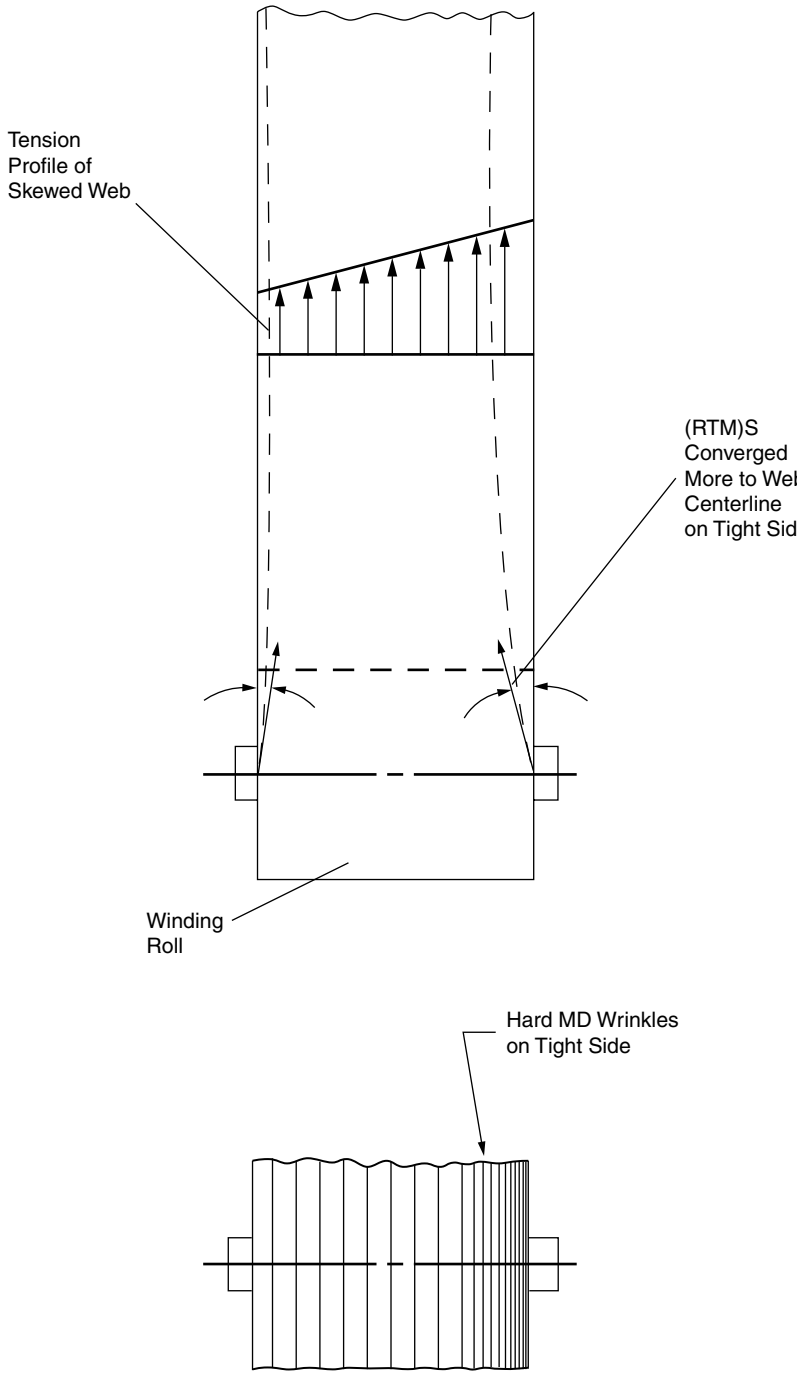

Figure 1.9 Effects of additional tension on skewed webs on winding roll.

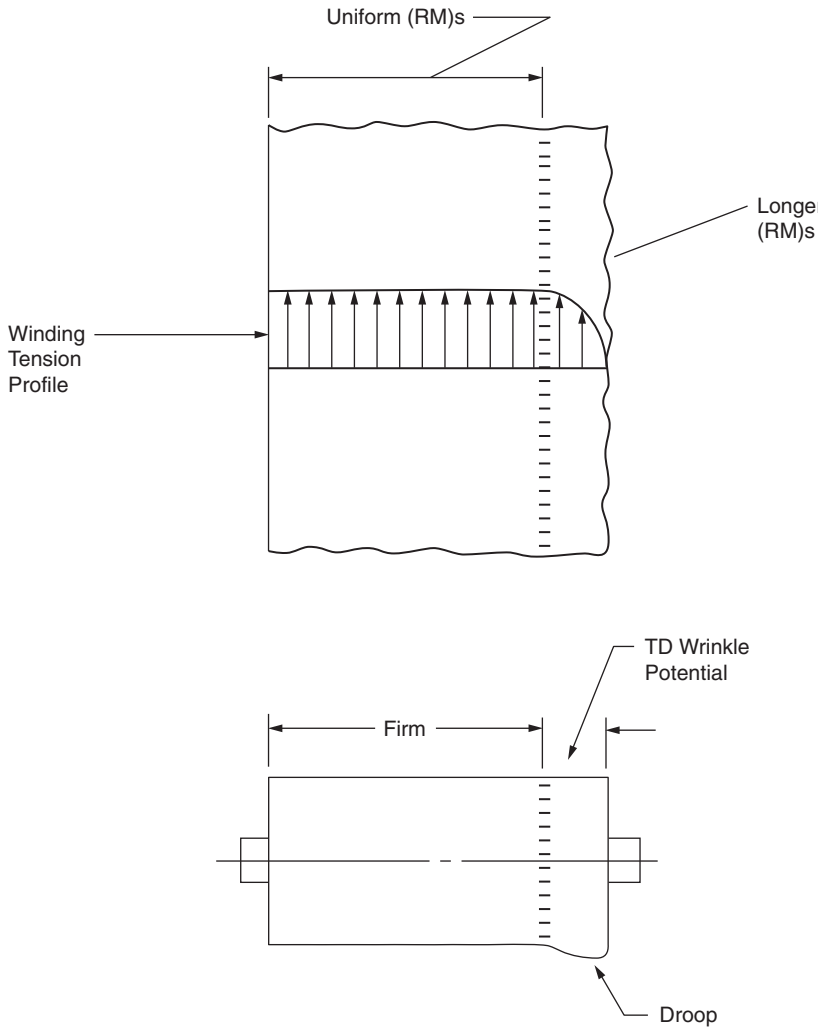

Figure 1.10 Effects of baggy edges on winding roll.

Despite the difficulties of these processes, there often is sufficient justification to flatten and straighten webs with either type of machine because of the web's added value. Either machine can be built inline or offline.

Generally, behavior problems of laminated webs may be analyzed in the same manner as homogeneous webs. Although these webs may be thick enough to tolerate some minor non-alignment of rollers, they develop wrinkles from non-aligned tracking and RMs forces, and a correctly aligned machine is necessary for troublefree operation. Curl (MD and TD) and buckle (flatness) problems are the most prevalent types of laminated-web distortion.

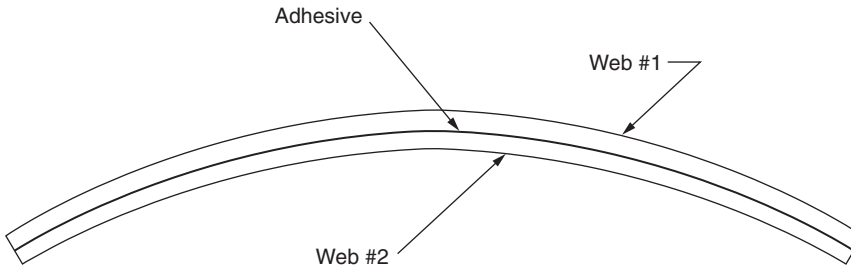

Figure 1.11 Curl in laminated webs.

Curl, shown in Figure 1.11, occurs when the laminating adhesive shrinks as it cures and/or cross-links in the laminating step. Laminated webs will curl if the following relationship is not true:

$$T^2_{\text{(WEB A)}} \times M_{\text{(WEB A)}} = T^2_{\text{(WEB B)}} \times M_{\text{(WEB B)}} \tag{1.1}$$

where T = web thickness and M = stress/strain modulus for the webs.

Curl may occur even if Equation 1.1 is satisfied, when the two webs that are joined do not have the same planer elongation at the moment they are fixed together in the laminating nip. The elongation of webs before the laminating nip roller can be determined by the following equation:

$$\Delta L = (L \times S)/(M \times T) \tag{1.2}$$

where ΔL = amount of web elongation, L = length of span between the laminating nip point and the last tension isolation point in the thread path, S = web stress in force per unit width, M = stress/strain modulus for the web material, and T = web thickness.

Equations 1.1 and 1.2 apply when two webs of different materials are joined in the laminating nip. Sometimes curl is unavoidable, and to minimize it one web must be operated at a much higher web stress. For example, when one web is much thicker than the other or has been oriented only in one direction, the thinner web may have to be operated at the maximum stress level to counter the bending forces (curl) in the thicker web. This technique works because the thinner web is narrowed by high tension before the laminating nip and tries to widen when the higher tension is relieved. The elastic forces that try to widen the thin web tend to offset the bending forces of the thicker web. When a web is operating in the elastic zone, the amount width reduction may be calculated from the following equation:

$$\Delta = -(R_P \times S)/(T \times M) \tag{1.3}$$

where Δ = difference in dimensions between a relaxed web and the same web at stress level S measured in in./in. unit width. R_P = Poisson's ratio for

the web material. S = tension force in MD direction/unit width. T = web thickness. M = stress/stain modulus.

Sometimes curl can be further minimized by operating the laminator at the maximum speed where peel strength stays just within the lower limits allowable by product specs. Faster speed reduces curing time on the hot roller and likewise the amount of shrinkage of the adhesive. However, this is a very tricky tradeoff for the laminating operation because of the chance of running product out of peel spec. This should be done only as a last resort to minimize curl.

Buckle problems occur when plastic film webs are laminated to thin metal strip materials. Often the source of buckle problems is the difference in thermal growth of the two materials in the laminating nip. When the metal strip is heated by a partial wrap on the laminating roller and the plastic is heated in the nip only, the metal may expand thermally far more than the plastic. Buckles may occur after lamination when the metal tries to return to its original width as it cools to room temperature and the plastic is forced into compression. Figure 1.12 shows an example of buckle distortion.

Metal/plastic laminates severely stressed by buckling forces form several types of wrinkle patterns on the process rollers because of non-aligned tracking and RM forces. Thermal growth of laminate materials can be controlled by adjusting the hot roller temperature and the line speed. The amount of thermal growth of each material should be calculated to match as well as possible to prevent buckles.

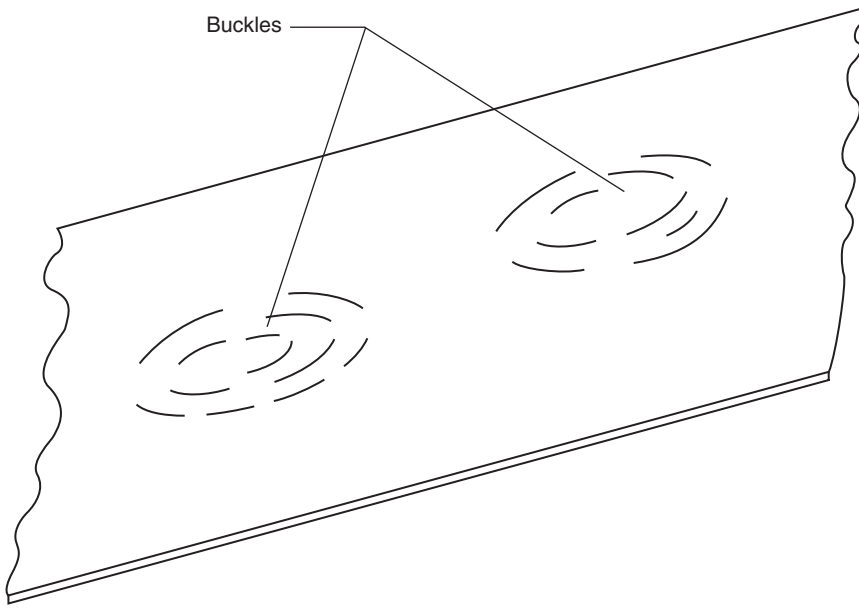

Figure 1.12 Buckles in laminated webs.

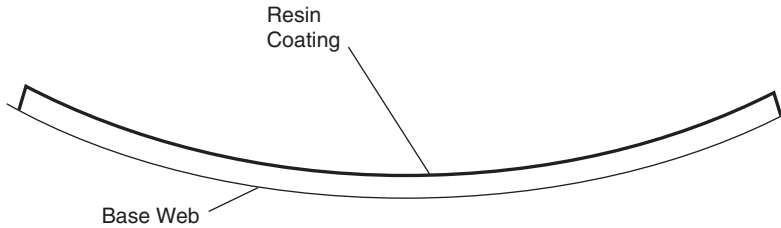

Figure 1.13 Curl in coated webs.

Melt extrusion onto a web of plastic, cloth, or a strip of metal produces forces that usually try to curl the product. Curl results when the resin melt shrinks as it cools to a solid on the metal strip or plastic film or fabric web. Figure 1.13 shows an example of curl in a melt-extruded product.

Severe TD curl can result in dished rolls as the product is slit to narrow width production rolls, especially when plastic film or cloth fabric is used as base stock.

Tension limitations

When thin webs of materials are put under tension, they experience strain in the machine direction, and they are subject to neck-in (width reduction). There will be no permanent width reduction in elastic materials when the tension is removed if the yield point of the material has not been exceeded. Plastic films normally do not have sharply defined yield points. The yield point on most plastic films is estimated from the shape of the stress/strain curve in the first few percent of strain values. Figure 1.14 shows a typical working estimate of a stress/strain curve for PET film.

Permanent deformation can be reliably avoided if the web materials are processed in the elastic region of the material.

$$\text{Stress} = (\text{Modulus of elasticity}) \times \text{Strain} \tag{1.4}$$

$$\text{Tension/Area} = \text{Modulus} \times ((\text{elongation due to tension})/\text{length})$$

$$T/A = M \times (\Delta L/L) \tag{1.5}$$

Using unit width, Equation 1.5 becomes

$$T_{PLI} = (M \times \Delta L \times t)/L \tag{1.6}$$

where t = amount of web thickness, ΔL = elongation due to stress, M = stress/strain modulus, L = web length between tension isolation points in the span being considered, and T_{PLI} = web tension in lb/linear in.

These equations help determine the maximum caliper variation that can be tolerated without permanent deformation in webs when they are wound

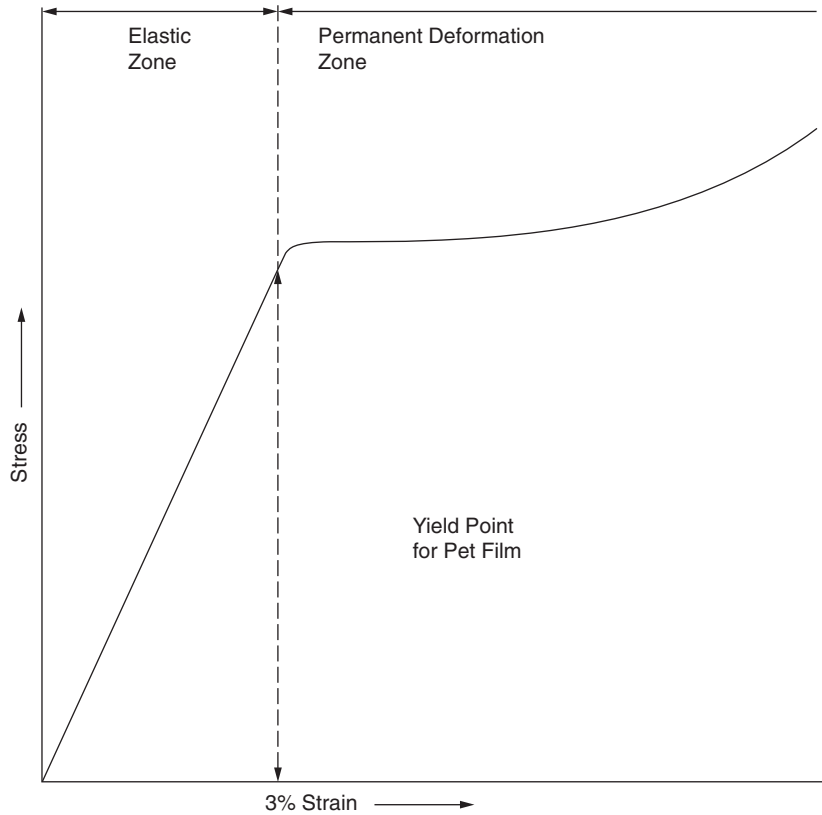

Figure 1.14 Stress/strain curve for plastic webs.

into rolls. (This is further discussed in Chapter 8.) Because there are non-aligned RMs in the web, actual web processing tension must be kept much lower than what would be calculated as acceptable in the previous equation. For example, PET has about 3% strain at the yield point. The modulus for PET has been determined to be about 500,000 psi. Yield stress is agreed to be about 15,000 psi. This corresponds to about 15 PLI for 1 mil thick film. This is much greater tension than can usually be tolerated due to the amount of neck-in. Equation 1.7 reflects this:

$$E_Y = -\mu \times (S_X/M_Y) \text{ or } -(\mu \times T)/(t \times M_Y) \tag{1.7}$$

where E_Y = web width loss in the transverse direction, μ = Poisson's ratio (lateral strain/axial strain), S_X = web stress in the machine direction, T = web tension, t = web thickness, and M_Y = PET material modulus in the transverse direction.

The modulus may vary between the MD and TD because the web may have more orientation in one direction than the other. Poisson's ratio for PET

film is 0.24. Thus, the web width loss would be 0.0072 in./in. of width if the web were processed at near the yield point. Experience has shown that this value is more than 1.5 times an order of magnitude greater than desired for good web-handling practice. PET webs should be tensioned at about one pound/mil/linear inch of width or 6.67% of the yield strength for general processing. Normal width loss is about 0.00048 in./in. for correctly tensioned PET webs.

Many lower strength films, such as low-density PE, usually do not have an identifiable elastic region and therefore must be expected to incur permanent width loss with even the minimal process tension required (for spreading, etc.) in a machine. Therefore, trim must be removed from the web before it can be rewound into good rolls, because the web edges thicken as the width decreases. (This is discussed fully in Chapter 8.)

Tension limitations with temperature

The yield stress is reduced significantly in plastic films as the temperature of the web increases. Figure 1.15 shows that the yield stress on 23-micron PET film is about 11.9 PLI at room temperature and that the yield drops to about 2.5 PLI when the web temperature reaches 93°C. Thus, the ideal web tension for 23 micron PET film is about 0.16 PLI at 93°C. Also shown is how yield stress is reduced in thinner webs by temperature in direct proportion to their thickness. The operating tensions must be lowered accordingly to keep the web from being stretched beyond its elastic limit.

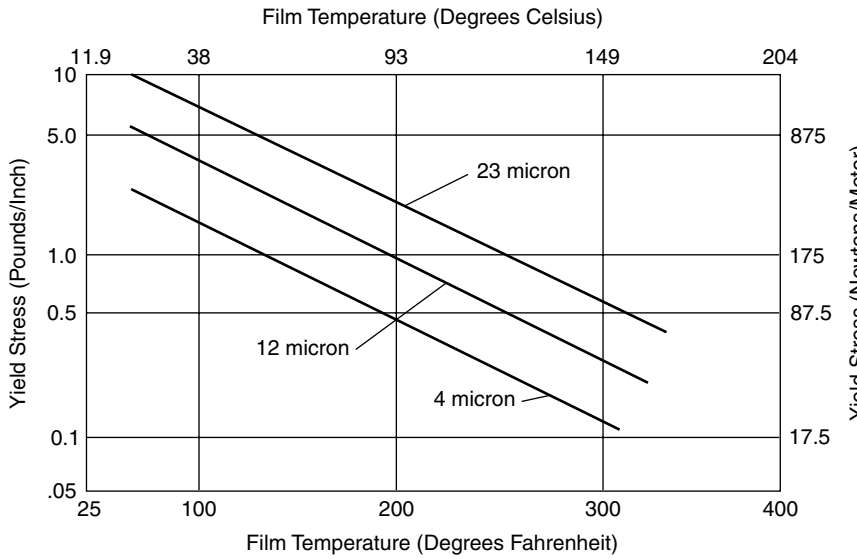

Figure 1.15 Yield strength reduction with temperature.

When thin films are operating at elevated temperatures, such as in drying ovens, driven or tendency-driven support rollers are required. Also required are tension isolation zones at each end of the high temperature zone.

chapter two

Tension isolation

Various tension isolation methods control the tension of web of material between zones in a converting machine to prevent damage from excessive elongation. This chapter describes several ways of isolating tension and discusses the merits and deficiencies of each system.

Nip roller tension isolators

Although nip rollers can cause problems such as scratches and web impressions, they are often used for tension isolation. In fact, nip rollers may be the only option for a tension isolation system for a particular product in a particular machine. Generally, tension isolation nip rollers should consist of one metal surface roller and one elastomer-covered roller. When the load bearing length is short ($L < 40$ in.) the amount of deflection can be reduced by constructing the rollers with stiff shells and using cylindrical nipping rollers. When the nip rollers are of significant length ($L > 40$ in.), the elastomer cover must be crowned to a profile that matches the deflection of the metal roller under the nipping pressure load.

The preferred crown profile is a natural parabolic curve of the form,

$$Y^2 = 2\,p\,X$$

where the origin is on the surface at the maximum roller diameter at the middle of the working roller face, X = decrease in roller radius, and Y = length from the center toward the roller end. You may determine p after calculating the maximum deflection (Δ) or X at $Y = L/2$. (See Figure 2.1.)

All nip rollers must operate at the design nipping pressure to create a uniform nipping footprint on the web. Any other operating pressure results in non-uniform tension in the web. Non-uniform tension may lead to fold-over wrinkles leading into the nip. Also, the actuators on both pivot arms of the movable roller should operate at nearly the same pressure.

If you must run the actuators at different pressures to keep the web flat, it is likely that the roller torsion bar is out of adjustment and will not

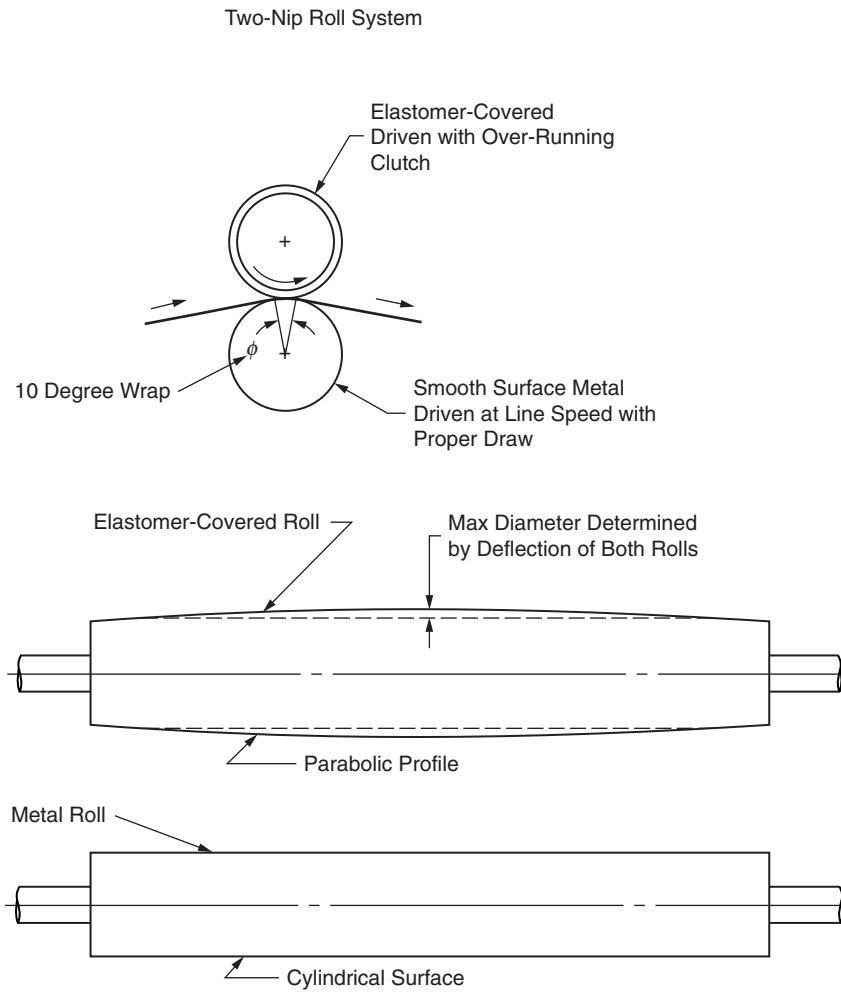

Figure 2.1 Vertical nip roller pair.

let the nipping roller close evenly on the stationary roller; or, one actuator has much more friction than the other and should be replaced. A good design will employ a stiff torsion shaft between the pivot arms on the centerline between their pivot points. This shaft should be strong enough to prevent one pivot arm from moving faster than the other, but be flexible enough to allow a clump of waste to move through unimpeded. After flexing, the shaft must be able to return the pivoting roller to its correct aligned position. The orientation of this shaft must also be adjustable, so the centerline of the nipping roller can be accurately re-aligned with the stationary roller in case the roller is stressed in an unusual way while it is open or closed. This sometimes happens during a maintenance outage or during a control system failure.

Deflection of the metal roller is significant when sufficient nipping pressure is applied to effect tension isolation. The following formulas show that deflection is directly affected by nipping load and exponentially affected by load-bearing length:

$$\Delta_{MAX} = -(ML^2/8\ EI_t) - (5WL^3/384EI_r) \tag{2.1}$$

where Δ_{MAX} = maximum deflection of the metal roller, L = effective beam length of the metal roller, W = total load (pressure per unit length times the contact length of the nip plus the weight of the roller shell acting as a uniform load in the plane of the deflection being considered), E = stress/strain modulus of the metal roller shell material (find the value of E for most materials in a recent materials handbook), I = area moment of inertia of the metal roller shell, calculated by

$$I_r = \pi/64(D_o^4 - D_i^4) \tag{2.2}$$

$$I_t = \pi/64\ D$$

where D_o = outside shell diameter, D_I = inside shell diameter, D = average diameter of the trunnion shaft.

M in Equation 2.1 is the moment on each end of the metal roller caused by the actuator couple forces created with the roller trunnions. While this is normally a small component of the total deflection, it can be of significant value in certain circumstances. M is calculated by knowing the length of the trunnion from the center of the bearing to the middle of the end plug that fits into the shell of the roller.

$$M = R \times (l) \tag{2.3}$$

where R = reaction load on the bearing, total roller load divided by two, (l) = length of the trunnion.

These equations are accurate regardless of the orientation of the nip rollers. The terms on the right side of the equation have positive signs if the opposite convention for positive beam bending is used. Nip pressure required for good tension isolation varies with products because of the different surface characteristics when different material passes through the nip. Webs with low friction will require more pressure than high friction webs for good tension isolation. The nip roller designer must consider the web slip when selecting the design loading pressure. Loading range for effective tension isolation is from 10 to 50 PLI.

In the design shown in Figure 2.1, the elastomer-covered nip roller should be driven by an over-running clutch to 98% of the line speed. Driving in this manner allows the nip roller to be closed on a running web without a major disturbance. This roller also may be driven with a torque-limited,

speed-controlled direct-drive motor, which can be better tuned to close on delicate webs without causing wraps or tears.

When the nipping roller is designed to close vertically, the thread path should be designed such that the web never wraps the metal roller more than is shown in Figure 2.1. Putting more wrap angle on the metal roller is not advisable because deflection causes the roller tracking forces to try to move the web to the center. Thin webs with sufficient friction tend to draw to the center and result in negative spreading or bunching toward the center.

The web should never be designed to follow the elastomer surface before or after the nip because of the differential velocity between the surfaces. The elastomer surface does not turn at the same speed as the metal surface because of elastomer deformation in the nip. Also, the necessary crown on the elastomer roller tends to draw a thin web to the middle and severe wrinkles will occur. Webs thick enough to resist wrinkling are subject to scratching.

The elastomer thickness range should be $^1/_4$ to 1 in. A thicker cover will deform far more than the thin one at any particular nip loading and therefore make a wider footprint on the web. The wider footprint will reduce the pressure per unit area or nip loading on the web and may affect the tension isolation efficiency. Cover thickness should be considered when the roller is ground frequently to keep the surface roughness in a desired range. It is usually better to recover the roll more frequently than to cope with the effects of a nip roller system that cannot run at design pressure because the elastomer is too thick or too thin.

Nip rollers that are designed to nip horizontally must be designed with as much care as those that nip vertically. One of the important differences to consider is that deflection from weight is at 90° to the nipping force deflection. (See Figure 2.2.)

When the nip rollers are longer than 40 in., both rollers must be constructed with the same bending deflection from their weight to keep the centerlines at the same elevation and the contact footprint uniformly constant over the full nipping length. There are situations where a long nip roller is used to isolate tension on a much larger diameter roller that has much less deflection. These cases may need to counter bow the nipping roller because the nip footprint cannot be made uniform when deflection differences are significant. The counter moments may be applied by using two spaced bearings on very stiff trunnions at each roller end. These bearings are mounted in a flex bearing housing that uses differential jackscrews to create the desired bending moment. The flex segment is at right angles to the roller axis and the assembly is attached directly to the end of the pivot arms of the nip roller. See Figure 2.3 for details.

Self-aligning bearings must be used in the flex housing. The differential jackscrews are an effective way to introduce metered amounts of counter moments to balance the roller weight bending moment. The jackscrews should always be locked in place with separate push screws that remove all slack from the threads.

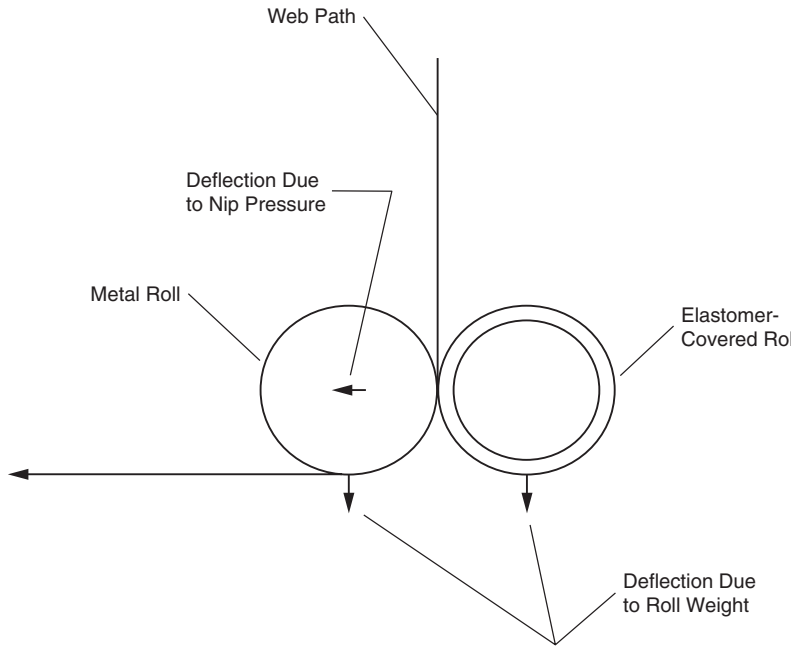

Figure 2.2 Horizontal nip roller pair.

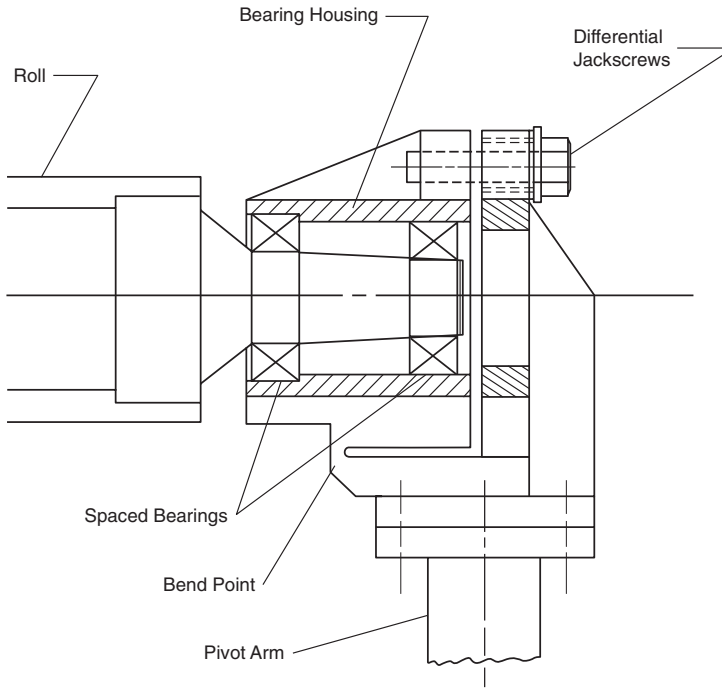

Figure 2.3 Counterbending roller bearing.

Three-roller nip systems

Occasionally, three rollers are employed to reduce scratch potential or to provide a more uniform surface velocity of the nipping surfaces. Three-roller systems can be very helpful in embossing and laminating operations where differential velocity is detrimental to the process.

Figure 2.4 shows a three-roller system that consists of one profiled metal roller surface, one cylindrical elastomer covered roller, and one cylindrical metal surface roller. The profiled metal roller provides the nipping pressure for tension isolation. It should be driven with a "helper" motor on long nip rollers. The "helper" concept uses a speed-controlled motor, but limits the torque that the motor can apply. The middle cylindrical elastomer-covered roller is an idler roller. The third roller is a cylindrical metal surface roller driven by the line range drive. The speed of this roller is used for setting the draw between the nip rolls and the last upstream tension isolation station.

Design of three-roller nip systems is a little more complicated than that required for two-roller systems. The same equations apply. Once the deflection (Δ) of the metal cylindrical roller has been calculated using the desired nip loading, the profile design for the metal pressure roller can be started. The bending force required to bow the cylindrical elastomer-covered roller to the same deflection (Δ) as the cylindrical metal roller can now be calculated by solving for W in the deflection formula. "M" can be ignored for this calculation.

The simplest design is to attach the pivot arms of the elastomer roller directly to the pivot arms of the profiled metal pressure roller, because the elastomer roller is first deflected around the profiled metal roller by its own actuators before the web is nipped. Also, the actuators must be programmed to hold the elastomer roller away from the profiled metal roller when the nips are open. This last action is necessary to prevent flat spots from devel-

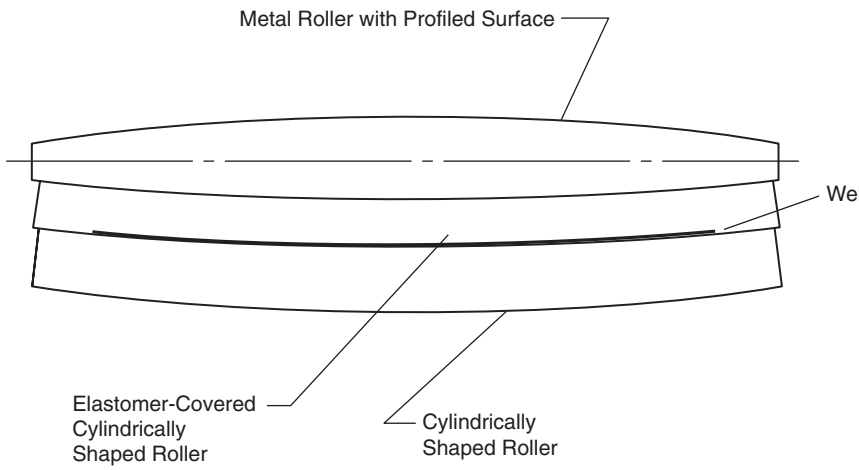

Figure 2.4 Cross-section of vertical three nip roller system.

oping in the elastomer. The force required to deflect the elastomer-covered roller by the amount (Δ) is added to the web nipping load to give the total load on the profiled metal roller for calculating the total opposite deflection of the profiled metal roller and the amount of crown. The amount of crown sufficient to bend the two cylindrical rollers just the desired amount is the sum of both deflections plus the amount of reverse deflection from the loads from bending and nipping.

The web is threaded between the two cylindrical rollers (Figure 2.4). Nip pressure is applied to the web by the profiled metal roller. As with two-roller nip systems, there is always just one operating pressure for the actuators on the profiled metal roller for any one set of roller shells in any one design. Also, there is only one operating pressure for the actuators that bend the elastomer roller around the metal profiled roller for any one set of design parameters.

"S" wrapped driven rollers

Driven elastomer-covered rollers are widely used in converter machines for tension isolation. In some machines, only a single roller provides tension isolation. In other machines, two or more rollers are nested together to form the tension isolation station. Figure 2.5 shows an "S" wrapped roller configuration.

Single rollers that are partially wrapped or nested rollers that are "S" wrapped for tension isolation on nonpermeable webs work best with textured surfaces and slow speed processes for webs exposed to the

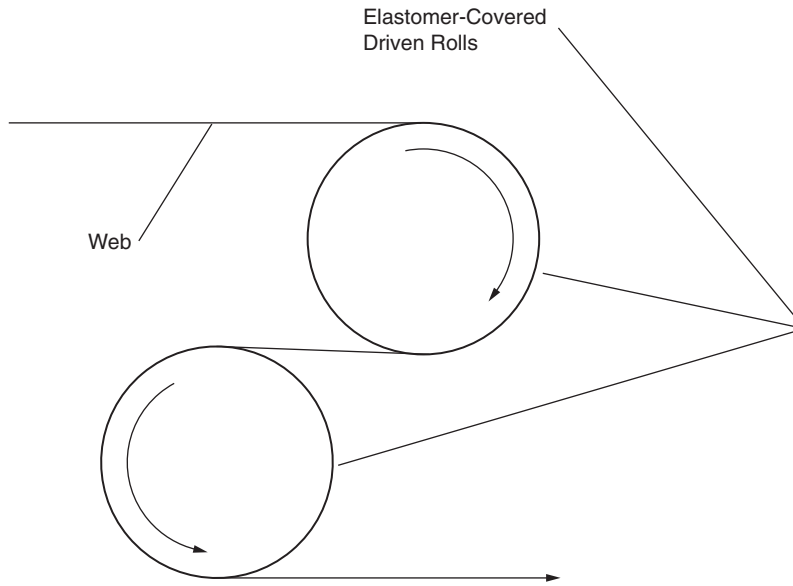

Figure 2.5 "S" wrapped rollers.

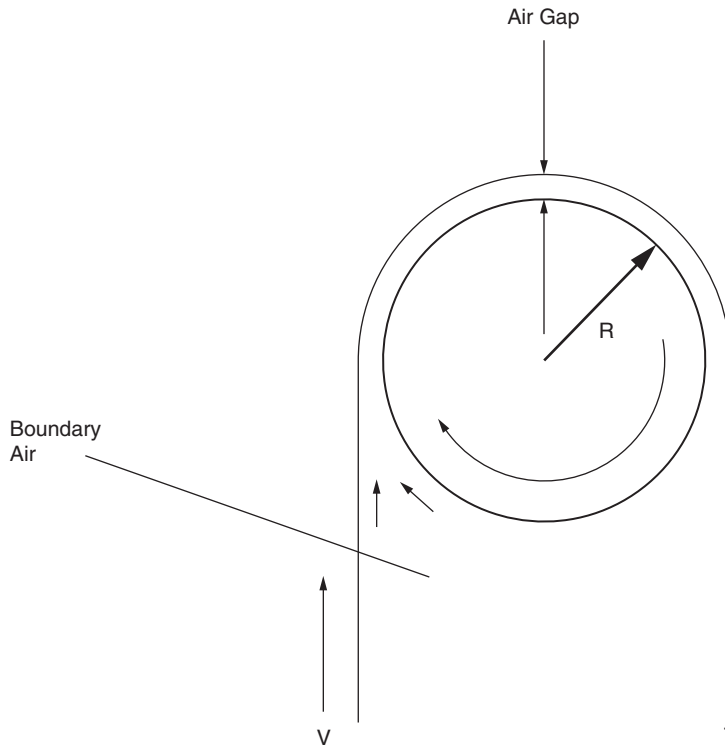

Figure 2.6. Boundary air gap between web and roller.

atmosphere. This is because the boundary air that follows the moving surfaces forms a fluid layer between the web and the roller surface. The thickness of the layer increases as the velocity of the surface increases. Static friction is broken when the fluid layer thickness is great enough to push the web out and break contact with the roller. The fluid layer in this case is air, which acts as a lubricant to overcome the tension restraint from the web's supporting surface. The thickness of boundary air between a film web and a smooth metal surface roller can be computed from the following equation derived by T.L. Sweeny and K.L. Knox, DuPont Research Dept. (1967):

$$H_O = 0.65 \times R \times (12 \times \mu \times (V/T)^{2/3})) \tag{2.4}$$

where H_O = fluid layer thickness, ft; R = roller radius, ft, V = web velocity, ft/min; T = web tension, lb/ft; μ = viscosity of fluid in lb sec/ft^2.

Figure 2.6 shows the conditions where Equation 2.4 is valid.

Roller radius is a very important variable in Equation 2.4. The flotation pressure of the fluid layer is directly related to web tension and inversely related roller radius as shown by:

$$P = T/R \tag{2.5}$$

where P = support air pressure, T = web tension, R = roller radius.

This equation assumes a solid surface roller and an impermeable web. It is not valid where there is sufficient volume storage in the roller surface, such as with textured surface rollers, to allow most of the web to be in contact with the roll.

The threshold fluid pressure for breaking static friction depends on the volume storage of the roller surface and the surface asperity of the web for any given web speed and tension.

When there is little or no fluid layer between the surfaces, the standard "belt equation" can determine the amount of tension isolation that may be obtained on nonpermeable webs. Such situations are found in vacuum metalizing machines or in the operation of narrow stiff belts operating open to atmosphere.

$$T_2 = T_1 \times e^{\mu\theta} \tag{2.6}$$

where T_2 = tension on the tight side of the web, T_1 = tension on the slack side, μ = coefficient of static friction between the web and the roller surface, and θ = wrap angle in radians.

Equation 2.6 is not directly applicable to wide webs of nonpermeable materials operating on high-speed machines and open to atmosphere because of the fluid boundary air layer. To use the equation in this case one must know the instantaneous value of static friction between the web and the roll when a specific thickness of boundary air was present. Thus, good tension isolation with "S" wrapped driven rollers requires that the roller surfaces be rough enough to provide relief volume storage between the web and the roller to prevent the entrapped boundary air from lifting the web sufficiently to break static friction contact.

The amount of surface roughness that should be put on tension isolation driven rollers varies with the stiffness of the web, amount of tension that can be applied, and the desired speed of the machine. Machine rollers often are covered with pimpled elastomer or cork tape to increase roughness. Sometimes this economical solution is all that is needed to ensure good contact and sufficient tension isolation for the desired process. However, problems sometimes develop as the tape ages and the glue begins to come loose. Also, wrapped rollers usually do not have a uniform OD, and some thin webs tend to wrinkle because of these nonuniform areas.

Textured surfaces that are machined into the roller surface have a better diameter uniformity and tend to be more successful than wrapped rollers. Diamond pattern grooves are often used with good success. Micro grooves that are cut axially in the surface also work well, especially in metal rollers. For thin webs of film up to 1 mil thick, the grooves should be at least 0.005 in. deep and no more than 0.010 in. wide. The distance between the grooves should be no more than 0.125 in. for lateral micro grooves and 0.250 in.

for diamond-cut grooves. The problem with larger diamond patterns on thin films is that the boundary air will hold the web away from the roll surface in the "land" areas bounded by the grooves, and some static friction is lost. *A word of caution: Never cut volume storage grooves that are aligned in the machine direction or nearly in the machine direction.* Thin films will be drawn into these grooves by web tension. This can form wrinkles or permanently deform the film.

Vacuum rollers

These types of rollers can be very effective tension isolators, and can be used for tension isolation on machines exposed to the atmosphere. When they are designed and installed properly, these rollers can be used on all types and thicknesses of webs. When operated correctly, they will not mark the web surface even on very high gloss films. Also, they can be used on wet or dry processes. The surface tends to stay free of contamination. Most designs are easily adjustable for changing web widths and/or wrap angles.

Wrap angle is an important parameter in vacuum roller design. The larger the wrap angle, the greater the amount of tension that can be isolated without having to use excessive differential air pressure. Figure 2.7 shows one type of vacuum roller design.

Equation 2.7 describes the maximum tension isolation capability with vacuum roller designs and can be used in all situations.

$$T_2 - T_1 = (T_1 \times e^{\mu\theta}) + (\mu \times K \times \Delta P \times R \times \theta) - T_1 \qquad (2.7)$$

where T_2 = web tension on the tight side, T_1= web tension on the slack side, μ = static coefficient of friction between the web and the roller surface, θ = wrap angle, K = % of surface area that the web touches, ΔP = differential air pressure between the top and bottom of the web, and R = roller radius.

Tension isolation can be maximized by increasing μ, θ, ΔP, and R; but maximizing K reduces the effect of ΔP by reducing the amount of web area acted on by ΔP. K should be optimized but not maximized. Normally, a negative pressure range of 10 to 20 in. of water will isolate tension satisfactorily for most processes.

A good construction design that optimizes K consists of a very porous metal roller shell, such as drilled metal plate or a fabricated honeycomb structure, which is wrapped with a coarse screen of about 50 mesh. The first screen is overwrapped with a finer screen of 100 or 150 mesh. The screens may be endless tubes or they may be butt welded and worked smooth by hand. Whichever method is used for the screens, they all must fit very tightly around the permeable shell. Even with ring screen restraint clamps, loose screens tend to slip on the roller shell under load. The screens may form buckle wrinkles if there is enough relative motion.

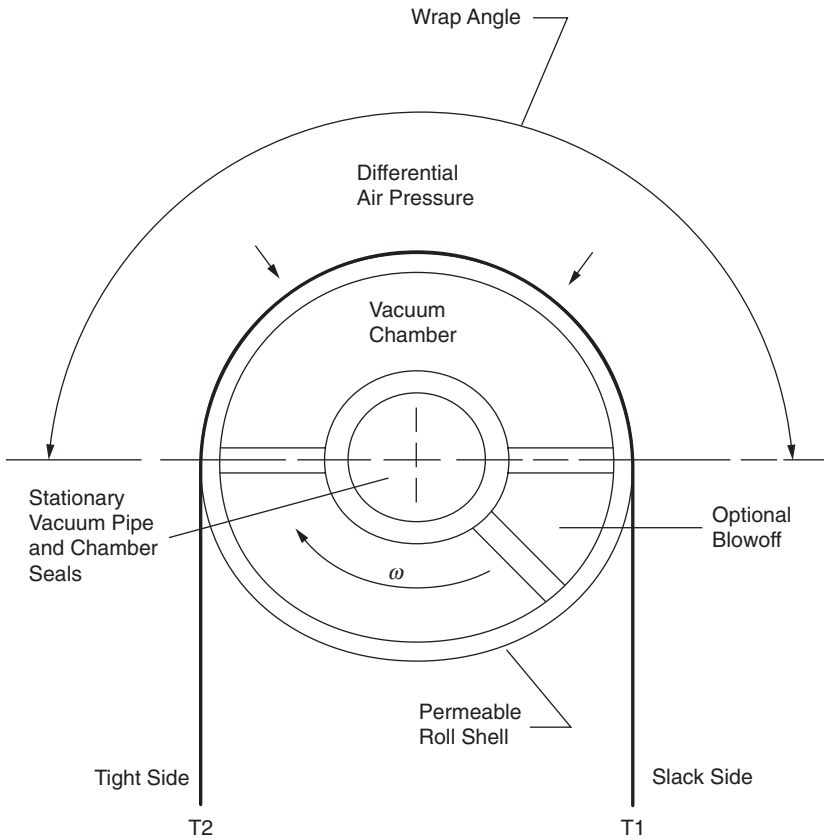

Figure 2.7 Vacuum roller tension isolator.

Fixed, stationary internal seals define the vacuum chamber. Some designs allow the length of the vacuum chamber to be changed with very little down time. Sliding edge block seals mounted on ways and usually moved together with opposing threads on a single screw provide the means for changing vacuum chamber length to product width. Product width changes can be made while the machine is operating. Also, some designs allow wrap angle changes with minimum maintenance effort. A blow-off chamber is optional on some designs. This chamber uses positive air pressure to prevent roller wraps when the product breaks downstream of the vacuum. Compressed plant air or lower pressure blower air, both with appropriate nozzles, may be used equally well for this purpose. An automatic web break detector downstream of the vacuum roller is essential for this operation.

Vacuum belts

Some web processes require tension to be isolated in areas that cannot be nipped or turned around a roller because the coating requires more drying,

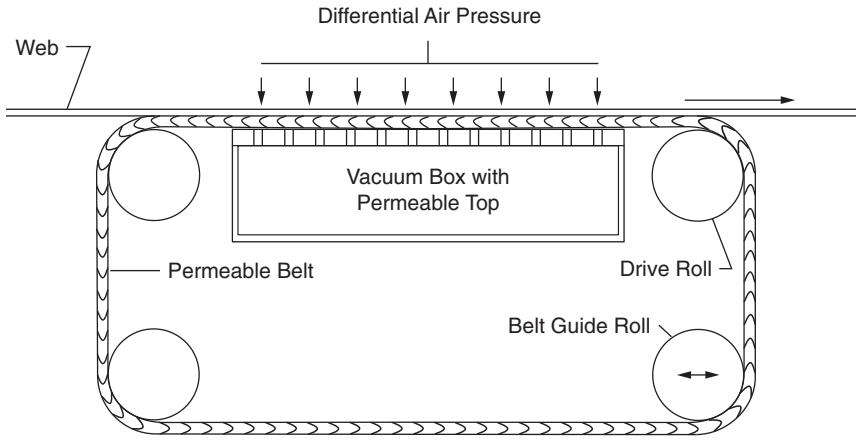

Figure 2.8 Vacuum belt tension isolator.

e.g., two ovens that operate at different temperatures. A vacuum belt is an option for these processes. (See Figure 2.8.) The vacuum belt consists of an air permeable belt that is pulled across the top of a drilled, hardened surface metal box. A blower withdraws air from the box and creates a vacuum. The web thread path is aligned with the top surface of the belt. Differential air pressure holds the web to the belt and the belt against the top of the box. Low friction is required between the belt and the drilled box top. Because the area is large, tension isolation can be achieved with low differential pressure, which reduces drag on the belt by the vacuum box. The belt must be guided to maintain alignment with the web, and a conventional web guide roller is used to guide the belt. A drive roller must be used to pull the belt. If necessary, the belt may be nipped (not shown in Figure 2.8) to give greater friction on the drive roller.

chapter three

Web tension measuring and control devices

Whether converting or producing products such as paper, metal foil, plastic film, or cloth, a web has an unpredictable nature that can create problems for your process. This chapter describes the control devices that prevent or counteract most of these adverse web actions.

Web tension sensing

Tension control of the web is essential for quality control of a product in any machine that treats or conveys webs, and the performance of the tension control devices can be no better than the sensing devices. They are the sentinels for the control devices. Web tension is usually sensed with one of two types of sensors: dancer or load cell rollers. Each type has a place in the arena of web handling. When the web cannot touch a surface because it is wet or has a delicate coating on both sides, there is a system that can be used to attenuate limited thread–path length changes as well as regulate web tension. This technique uses a mass–free-type dancer device.

Dancer-roller systems

This system can attenuate web-tension variation caused by length changes in the thread path and sense the tension magnitude. Thread–path length changes frequently originate at the unwind stand on a converting machine. This normally is due to the unwinding of nonconcentric supply rolls, rolls that are loosely wound, or rolls mounted on a noncentered mandrel.

Passive tensioning systems, such as magnetic particle or friction brakes, frequently used to provide the web tension on unwind stands, cannot increase the supply-roll rotational speed to yield constant length/unit time. This means that the web running through the first few rollers of the machine will have pulses of higher tension and slack web.

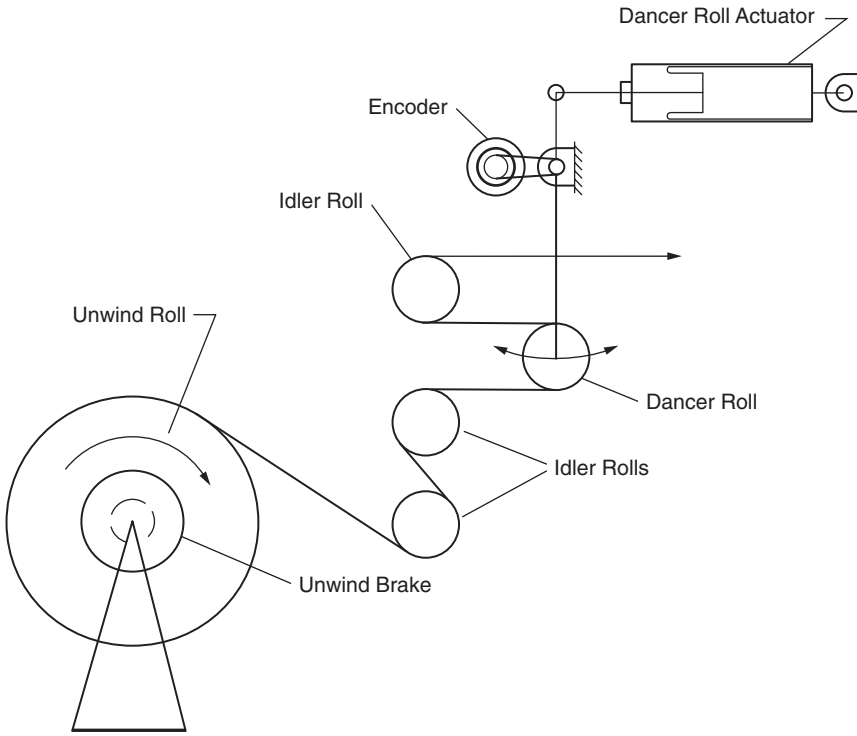

Figure 3.1 Dancer-roller thread path.

Thread-path length changes can also occur on the windup end of the machine. This usually happens when eccentric bladder mandrels are used to make master rolls. Also, there is a very large change in thread-path length when the winder turret is rotated during the roll doffing sequence. Figure 3.1 shows a simplified dancer roller in a vertical position. Remember that there can be no driven rollers between the dancer roller and the thread-path zone where you are trying to measure web tension. Web friction on the driven roller will isolate web tension, and feedback information from the dancer roller encoder to the unwind tension control device will be lost. The dancer roller is mounted in the thread path so that force from web tension can be balanced by force from the actuating cylinder. Any change in web tension causes the arm to rotate, either to shorten or extend thread-path length.

The desired amount of operating web tension is determined by the magnitude of air pressure on the actuating cylinder. Usually, air pressure is kept at the set point during the unwinding operation. In Figure 3.1 the dancer-roller arm is nullified in the vertical position, i.e., the vertical position is the desired operating position of this particular dancer roller. In this position gravity effects on the balanced forces are minimized when deviations in path length are small. An encoder is used to sense the magnitude and direction of the deviation of the arm from the vertical. If

the dancer roller moves to shorten path length, i.e., it moves toward the unwind stand, the encoder changes its output signal to the tensioning device control panel. In this case the change in signal would be to lower web tension. The encoder changes the signal to increase web tension if the dancer roller moves to increase web-path length, i.e., it moves away from the unwind stand.

The tensioning device is often a brake on the unwind shaft. The dancer-roller controls are programmed to react to a deviation of the arm position by always trying to move the dancer back to the vertical position. Air pressure acting on the piston of the actuator cylinder stays constant during these changes. Thus, the nonpressure side of the actuator cylinder must not restrict air movement as the piston oscillates in its cylinder. There should be several enlarged ports for the exhaust air to escape.

The encoder's deviation signal is proportional to the rotation of the dancer-roller arm. As the dancer-roller arms start the return to the vertical position, the magnitude of the change signal the encoder sends to the tensioning device panel begins a proportional reduction in magnitude as it moves toward the null-point setting. When the dancer roller reaches the null-point position, there is no change in signal from the encoder to the web tensioning device controls. Dancer control sensitivity must be damped to prevent overcontrol. A correctly damped system will keep the arms running in the near vertical position with smooth reaction to web-thread path changes and almost constant tension.

Constant tension payoff is preferred for the unwind stands on all converter machines. Web spreading is critical in this area and a pulsating tension adversely affects the spreading efficiency. Thus, a means of adjusting for thread-path length change is necessary to maintain a nearly uniform tension on the first few rollers during the complete unwinding of the supply roll. The dancer roller fulfills this requirement very well.

Dancer-roller design is important for good operation. The swinging mass must be kept low to reduce rotational inertia, yet the arms should be stiff to maintain alignment during movement. The roller arms should never be counterbalanced with weight, because it increases the rotational inertia and its inertia keeps the roll movement out of phase with the changing thread-path length. Where possible, only one actuating cylinder should be used to move the swing arms. This cylinder should be connected to a crank arm that is fixed to a very stiff shaft that connects the swing arms. The swing arms should be about 2 times longer than the crank arm. Longer swing arms (up to 30 in. if possible) are better than short arms for unwinding very eccentric rolls, because there is less weight change on the longer arms as they swing through the arc when adjusting the thread-path length that keeps the web at nearly constant tension.

The connecting shaft between the arms must be split and coupled with an aligning device, such as one with harmonic gears, for ease of alignment. The aligning device must be locked in place after the shaves have been aligned.

The dancer roller should have a textured surface with sufficient reservoir volume, so that the web will stay in good contact during operation. The roller surface also should be slightly concave to ensure web spreading. Web spreading is discussed in Chapter 4.

Pivoting dancer-roller arms are preferred over parallel moving side frames because of the simplicity of the mechanism. Besides having more inertia because of more mass, there is usually more mechanical hysteresis in a parallel sliding arrangement, because the sliding frames on each side of the machine must be connected with chains and sprockets to ensure parallel movement of the roller ends. Linear bearings tend to bind with contamination and/or lack of lubricant in the long term. These factors reduce the ability of the dancer roller to keep up with the changing thread-path length.

Load-cell rollers

These rollers have force transducers, such as strain gages or electromagnetic transducers, either in the roller shaft or in/under the bearing mounts. A load-cell roller is much easier to install than a dancer-roller system, because it uses much less space and has no moving parts other than a roller that turns. However, there must be a constant wrap angle on the load-cell roller at all times. This requirement means that there are always three rollers in a load-cell sensing system. And like the dancer roller, there must not be a driven roller between the load-cell roller and the zone of the thread-path zone where you are trying to control web tension. The load-cell roller must also be an idler roll. (See Figure 3.2.)

When a strain-gage-type of force transducer is used, a means must be present to prevent overloading the strain gages when the web breaks or wraps occur. Some transducers are built with internal deflection limit stops

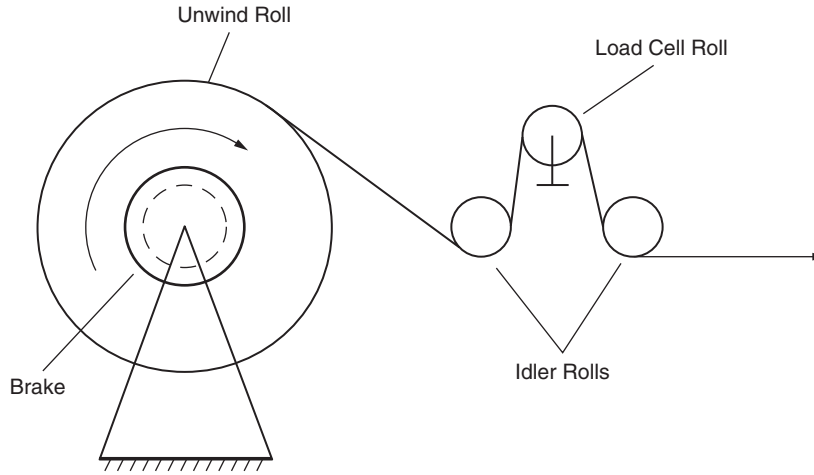

Figure 3.2 Load-cell roller thread path.

that prevent damage when overloading occurs. One restriction when using a strain-gage-type of transducer is the limited range of good resolution of signal span that can be sensed with a particular set of strain gages. Good resolution of the output signal can be quite narrow in some units. Some transducer manufacturers now install a high and low range in the same unit to negate the need to change out the transducers when webs of greatly varying tension requirements are run on the same machine. However, all strain gage transducers are subject to drift and must be calibrated on some frequency no matter what products the machine runs. Another point to remember is that the 0- to 10-mV output signal is also subject to interference from power surges in nearby high voltage cables and other electromagnetic devices. Shielded, twisted pair output wiring is essential for reliable information strain-gage systems.

Load cells that compare electromagnetic change within the transducer to web-force change are not as delicate as strain-gage-type systems. They tend to give good resolution over a larger range of web tension and are not as subject to calibration drift as strain-gage-type transducers. They also are advertised to be very reliable in unfriendly environments.

Developments in motor controls and encoders have made it possible to use load-cell rollers to sense web tension on certain driven unwind stands under certain conditions. These unwind stands must use either AC flux vector or high-response DC motors with encoders that output roll position to the motor controls more than 1000 times per revolution.

There are at least two more conditions that must be satisfied before nearly constant tension unwinding can be achieved: (1) there must be no slack in the drive train from the motor to the roll core, and (2) more horsepower must be used than would otherwise be required. Calculations have shown that the horsepower requirement is not linear with winder speed. For example, about 12 more hp is needed to provide constant tension at 1000 fpm than at 600 fpm when the eccentricity is 0.125 in. and the mill roll weighs 1000 lb. (See calculations in the Appendix.)

Mass-free dancer sensing

There is a technique that permits a limited amount of web attenuation with thread-path length changes and allows web tension to be fairly accurately approximated. This technique or system may be used when the amount of thread-path length change is small and web spreading is necessary in the specific zone. Figure 3.3 shows this system, called a mass-free dancer system, and it works as follows: web tension is related to pressure in the air gap between the web and the turning pipe surface by the following formula.

$$T = (P/27.67) \times R \tag{3.1}$$

where T = web tension in PLI; P = air gap pressure, in. H_2O; and R = radius of the outside surface of the turning pipe plus the screens, in.

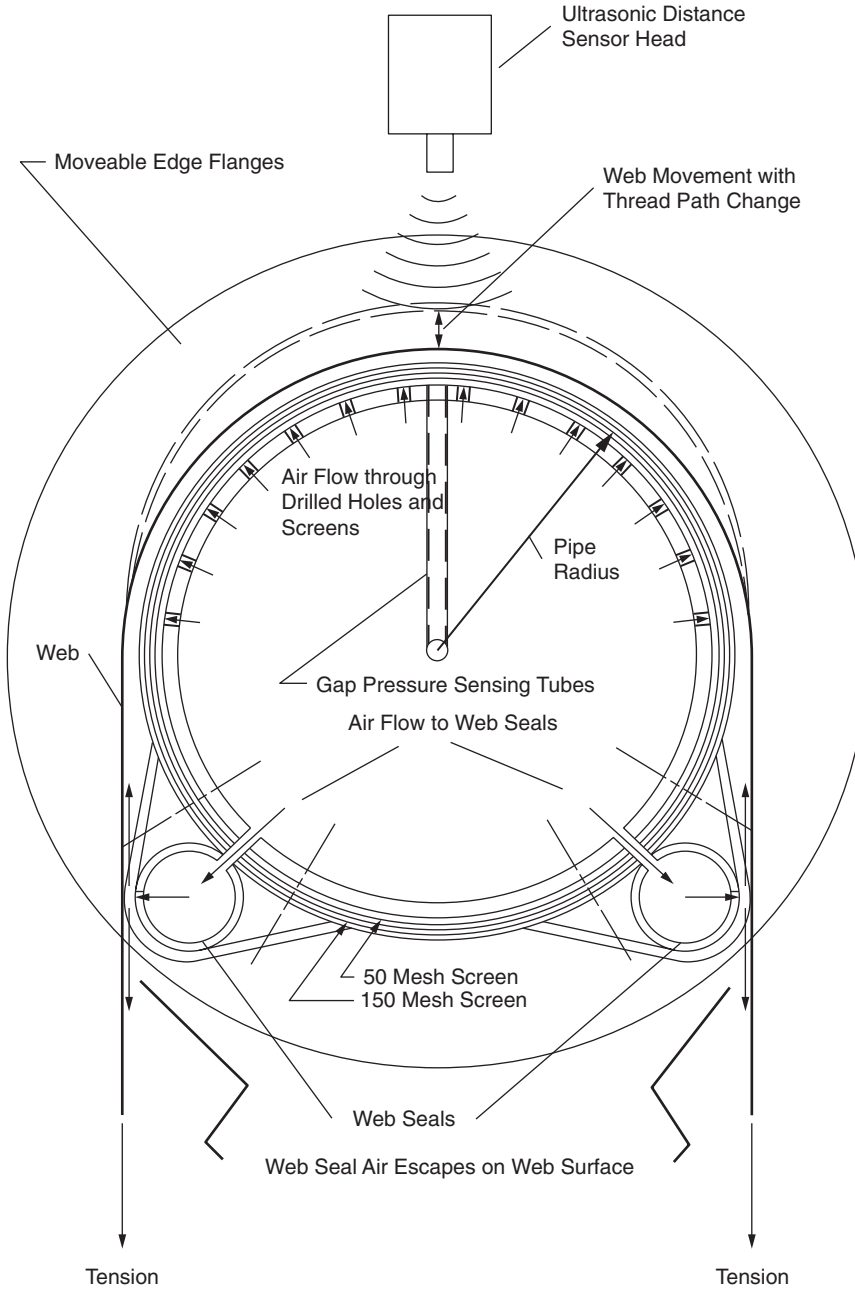

Figure 3.3 Mass-free dancer system.

Air from a blower at low pressure is introduced in the pipe to float the web above the screen surface. Screens shown in Figure 3.3 distribute flow uniformly across the full width of the web when air is introduced into both

ends of the pipe. The operator selects the required air pressure for the desired tension in the web for that zone. Air pressure is adjusted by adjusting the speed of a variable speed blower motor.

Gap air pressure is sampled by a series of sampling tubes that are connected to a common manifold. Gap air pressure is averaged in the manifold to improve accuracy for computing web tension. Flow of air in the turning pipe is not excessive. A larger diameter pipe will permit use of lower air pressure when higher web tensions are desired. Air from the web seals is directed perpendicular to the web surface. Flow along the web surface in both directions from the nozzles creates a low static pressure over the seal nozzle areas.

Atmosphere pressure keeps the web close to the seal and limits the flow from the seal. Boundary air on the web keeps the web from touching it while it moves over the seal surface. Adjustable edge flanges are moved to within $^1/_2$ to $^1/_4$ in. of the web edge. This distance allows air in the gap to flow freely out both ends of the gap without web flutter, even on very thin webs.

When thread-path length changes occur, distance to the ultrasonic head changes. The ultrasonic sensor is calibrated to null at midrange of gap height change capability. When the web height is not at the null position the ultrasonic controls send a signal to the tensioning device to either decrease or increase web tension to bring the web distance back to the null distance.

One extra advantage with this dancer-type system is the excellent spreading that comes from creating a semitubular form with the web. Air pressure under the web keeps the web extended in the TD to the fullest. When properly constructed and operated, the system will operate scratch-free on webs from the very thinnest to webs up to 7 mils thick.

chapter four

Web spreading

Regardless of the process, the web must remain flat as it moves through the machine, so web spreading is a constant concern for any converter operation. Sometimes the web reacts to a process in a manner that induces wrinkles where the web would otherwise run flat. Sometimes a prior process has implanted stresses in the web that form wrinkles over rollers where other webs will run flat. Sometimes machine rollers are marginally aligned and webs with a small amount of skew will wrinkle while flat webs will not. Whatever the cause, spreading is needed on all converting machines, especially as the web is unwound from the supply roll and at the exit of heat treating stations. Web spreading is also necessary in web-producing machines prior to the machine windups.

Increased diameter under web edges

Many converting operators know that wrapping a couple of turns of masking tape around the roller at the web edges will often eliminate wrinkles on that roller. Here is the scientific explanation for this handy solution for eliminating wrinkles:

- The surface velocity of the taped edges is greater than the velocity of the rest of the roller surface.
- When there is good friction between the tape and web surfaces, the edges try to pull the rest of the web.
- When the edges try to pull the web, the web's resistance tension members are pulled toward the edge at an angle divergent to the machine centerline.
- There is reduced friction between the web and the rest of the roller surface because the edges are carrying higher tension.
- Because of the slightly reduced tension on the balance of the roller surface, especially on rollers that are fairly smooth, there is more boundary air between the web and the roller.

- A thicker layer of boundary air and less tracking friction reduces the effects of non-aligned tracking forces that are often the cause of wrinkles.

Figure 4.1 illustrates this process.

The following precautions must be observed when wrapping the roller ends with tape:

- The web edges must always stay on the raised edge surface. When the edges are allowed to overlap, wrinkles will form on the tape. This is because the tape is drawing the web towards it from both sides.
- The tape surface must have good friction with the web to affect spreading. If the web slips on the tape, the tape could be a source for more wrinkles.
- The buildup must be kept small to prevent slip on the tape. A buildup of 0.010 to 0.020 in. on the radius is effective on most webs.
- The wraps must be smooth. Poorly wrapped tape may be a source for wrinkles.

Undercut rollers may be used where the width of the web is nearly always the same or varies only 1 to $1^1/_2$ in. from the base width. When undercut rollers are used, the larger diameter surface must be well textured to provide the traction necessary for good spreading. The undercut region should be much smoother than the raised section to allow boundary air

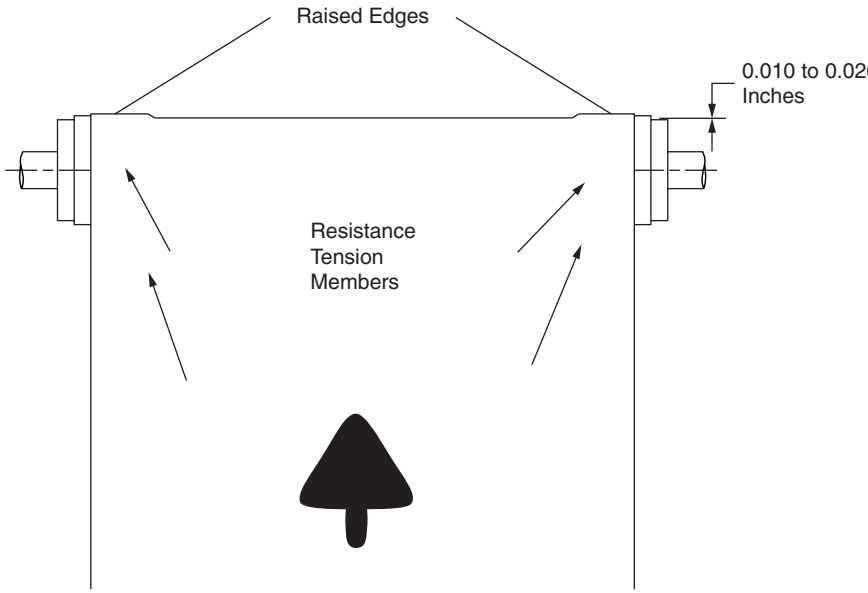

Figure 4.1 Effects of raised diameter at web edges.

under the web. More boundary air reduces friction and assists in the spreading process.

Concave rollers

The concave roller is a modification of the raised edge concept. Concave surfaces help spread the web in the same manner as taped edges but with a smooth transition toward the larger diameter and without the glue problems that tape presents to a process. As with tape application, there are precautions to be taken with concave rollers.

1. The concave roller surface must be textured to provide good tracking friction with the web. The texturing should be machined into the roller surface to ensure that roller diameter follows the desired profile. Forming the roller profile first in an aluminum shell and then adding texture via knurling in a diamond pattern with 21 teeth per inch (TPI) at a depth of 0.010 in. works well for a surface texture. Also, *and very important to prevent marking the web*, the raised metal must be smoothed by machining about 0.003 in. off the raised surface. Additional polishing of the raised surface may be necessary if the machining leaves any significant tool marks. Performance of the roller can be further enhanced by black anodizing the roller shell. A roller shell made in this manner has good longevity under most conditions.
2. The roller surface should be machined into a parabolic curve. On rollers up to 90 in. long, the following formula can be used:

$$Y^2 = 180{,}000\ X \tag{4.1}$$

The origin of X and Y is on the surface and centered in the smallest radius of the roller. Y represents 1/2 of the roller working surface length and X represents the roller radius extension for Y length. (See Figure 4.2.)

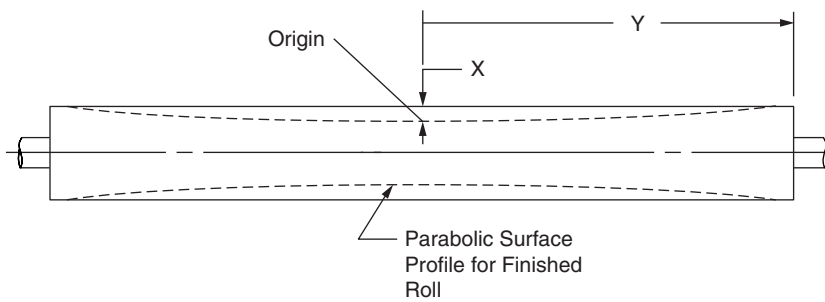

Figure 4.2 Concave roller profile.

3. The wrap angle should be from 90 to 180° on all concave rollers. A large wrap angle increases dwell time and increases the effectiveness of the raised edge surface.
4. About half of all the rollers in the machine can be concave profiled. Care must be taken to ensure they are not used where web temperature lowers the yield stress enough to permit permanent elongation with the increased path length of the raised edges.

While concave rollers spread the web, barrel-shaped rollers tend to draw the web to the center due to the higher velocity tracking forces in the center. Barrel-shaped rollers should always be avoided for this reason.

Bowed spreader rollers

These rollers are positive spreading devices when there is good traction between the web and the roller surface. However, they must be used properly to achieve the best results. They should not be overused in any one machine to correct other web-handling problems in the thread path. Figures 4.3 and 4.4 show plan and elevation views, respectively, of a typical bowed roller installation. Spreading is achieved by the diverging tracking forces on the bowed roller surface. The surface tracking forces move perpendicular to the roller axis in each cross section of the roll as it rotates. Because the axis is bowed, the tracking forces diverge in the plane of the web on the roller surface provided that the incoming web touches and departs the roller surface in the proper quadrant. These forces are only effective when they track outward from the roller centerline during the quadrant of rotation shown in Figure 4.4.

Maximum spreading occurs when the web is wrapped 90° for any amount of bow. Because the outside tracking forces diverge farthest from the web centerline, care must be taken to prevent static friction from breaking at the web edges because there is excessive bow in the roll. Web slip can generate debris as well as wear away the covering on the bowed roller. Excessive bow is the one error most often committed with bowed-roller operation. It is best to operate at minimum bow for the product being run even though this may result in having to reset the bow with product changes.

Thread-path space is required for proper installation of a bowed roller, because lead-in and exit rolls are required. One problem with a bowed-roller installation is that the web-thread path length is longer in the center than at the edges and sufficient span for the ideal setup may be compromised by machine restraints. When the thread-path length difference over the bow-roller center is longer, compared to the edges, than the length that the web has been elongated under MD tension in either the before or after span, there will be slack toward the web edges. This slack must be taken up to prevent wrinkles from developing in the web edge regions. Concave surface rollers on both, before and after the bowed roller, can be used to take up some of the slack on the outside edges. They will also help keep the web spread.

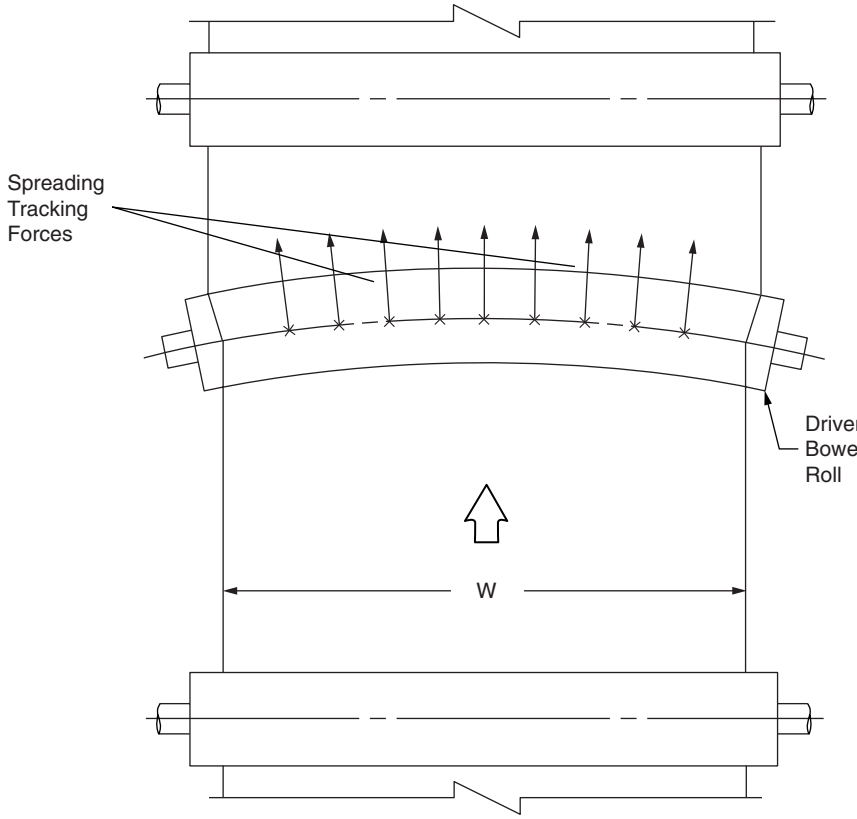

Figure 4.3 Bowed-roller spreading action, plan view.

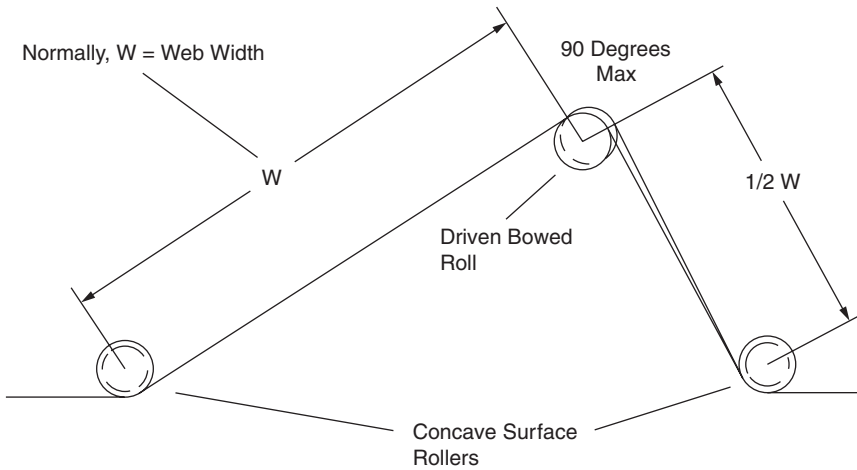

Figure 4.4 Bowed-roller thread path, elevation view.

More concave surface rollers may be used in the thread path as needed, but care should be taken not to exceed the permitted elongation.

The bowed-roller surface must be ground rough enough to provide a reservoir for boundary air to ensure good contact with the web, especially when working with wide webs. A grinding wheel made with larger grit particles may be required to achieve the required roughness. Even with the rougher grinding wheel, frequent grindings may be needed to keep the necessary surface roughness for good contact friction.

Bowed rollers should be driven when used on high-speed, thin, elastic webs or wide machines. This recommendation is based on knowledge that significant energy is required to elongate and distort the roll elastomer surface as it rotates through the turning cycle. If the roller is not driven, the energy to turn the roller at line speed must be supplied by the web. This additional energy requirement increases web tension and reduces web width. When the web is under high tension, the web tends to slip at the edges and abrade the roller cover. This is especially true on high-speed machines. Abrasion of the roller cover may cause objectionable debris in the process.

The bowed roller should never be used where the process temperature reduces the web yield strength to the point the web is permanently elongated. The result will be a baggy center in the web. This condition may exist in some vacuum-coating operations on thin film webs.

Air-bearing spreading

The concept introduced in Chapter 3 for a mass-free dancer system is an excellent method for spreading the web. See Figure 3.3 for details of construction and operation. This spreading technique also works for ultra-thin and delicate non-porous webs, and the concept works on wide as well as narrow webs.

Angled opposed-edge nip rollers

Edge nip rollers that operate at a small diverging angle from the machine centerline are normally used to spread the web at the exit of ovens on film-producing machines that are equipped with tenter-chains. Usually, the web has thickened edges (beads) that are not fully orientated or flat and must be subsequently removed before winding. Although these angled rollers are very effective spreading devices, they normally mark the web and their use is limited to where the edges will be trimmed before winding. There are many commercial configurations of these machines available to the consumer. Figure 4.5 shows typical setup.

The web usually can be placed between the rollers manually or semi-automatically if air actuators are used to provide the nipping pressure. Normally, the underside roller has a metal surface and the top roller has an abrasion-resistant elastomer surface. The nipping force depends on the amount TD tension that is required to keep the web taut in the span between

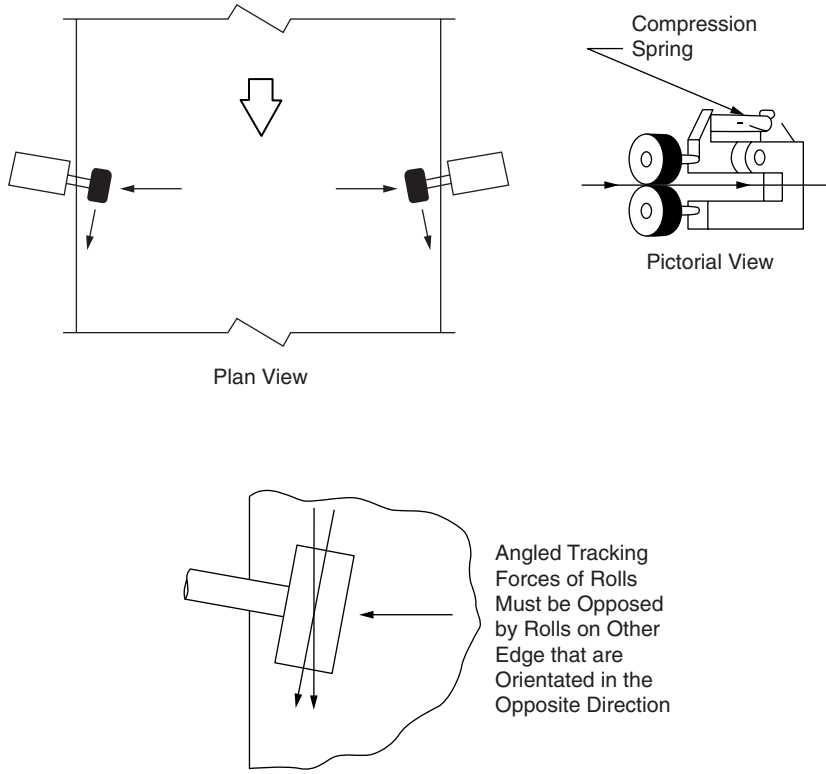

Figure 4.5 Edge nip spreader rollers.

the roller sets. While roller lengths vary on commercial units, there is a limit to the effectiveness of roller length-to-TD-tension capability. Webs up to 7 yards are spread effectively with rollers that are no more than 4 in. long and 5 in. in diameter.

All top rollers should be equipped with center pivoting, self-aligning bearing assemblies, so they will operate flat on the full face of the bottom rollers. The bearings must also be able to operate with side-thrust loading.

Rolls that are longer than 4 or 5 inches sometimes have problems with uniform nipping force and are less effective at spreading than the shorter ones.

The most common error in operating edge nip spreading rollers is running the rollers at an excessive angle to the web. Operating at excessive angles will abrade the web and roller surfaces plus generate debris. The rule to remember is to operate at the minimum effective angle. This angle can be quickly found by trial and error.

Flexible-leaf spreading rollers

There are many other types of spreading devices available. Some have very limited value as spreading devices. For example, the type of spreader roller

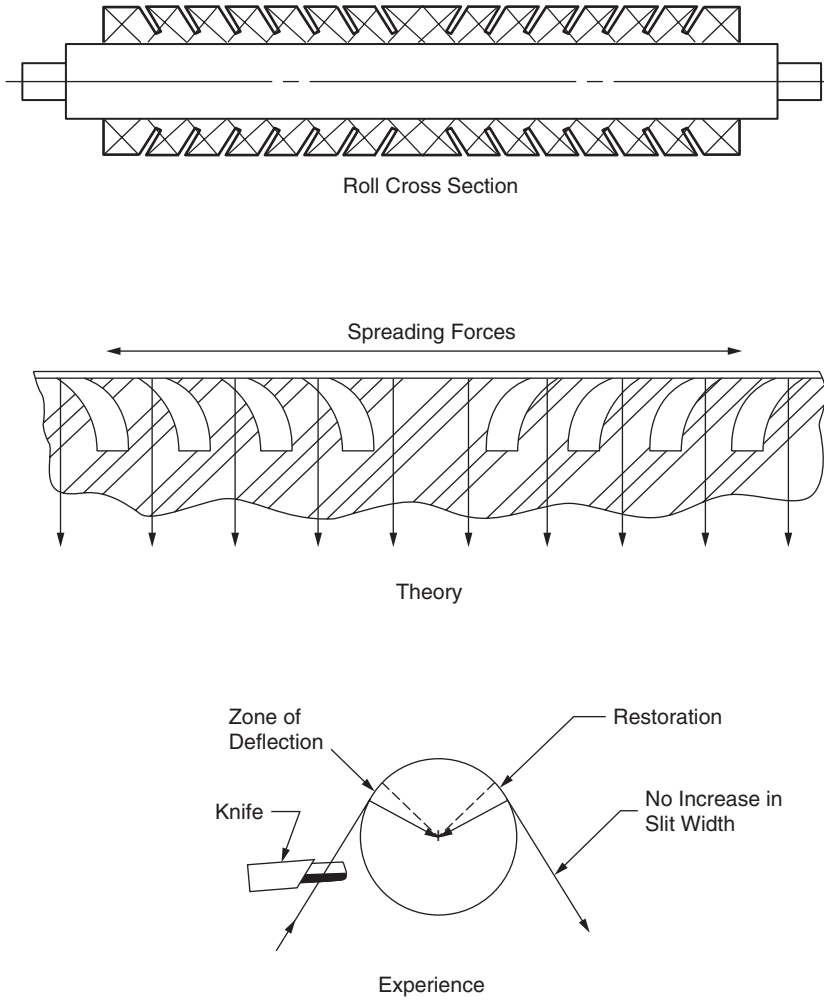

Figure 4.6 Flexible-leaf rollers.

made with concentric or spiral flexible leaves that are supposed to flex outward from the roller center as they are deflected by web tension do not seem to be very effective as spreader rollers. This is probably because the centrifugal force pushing the leaves radially outward is greater than the web tension that is trying to deflect them downward. However, these rollers are very effective for turning at line speed and breaking up angled tension patterns in the web. Figure 4.6 illustrates the concept of a flex-leaf spreader roller. The spiral-cut leaf behaves in the same fashion as described in Figure 4.6. Watching a web running over a spiral-cut roller causes an optical illusion as the ripple caused by the spiral cut advances toward the web edge. The brain interprets this action as spreading work, but no physical force is at work because all points on the surface of a straight-axis roller move in

the MD direction and therefore can only track the web in that direction. Also, as noted, the centrifugal force on the leaf resists deflection by pushing upward on the leaf, especially at high speed.

There is also an optical illusion when watching a web running on tape that is applied in a spiral to a roller surface. However, as noted, all points on a straight-axis roller track in the MD and can do no work in the TD. Sometimes a wrapped roller seems to reduce wrinkle generation, when the improvement actually came from pulling the web at higher tension at specific points on the roller surface and letting more boundary air between the roller surface and the web.

chapter five

Web guiding/steering

Web guiding, also called steering, is essential on most converting machines to keep the webs on or near the machine centerline, especially those that process thin webs. Sometimes sections of the machine are moved laterally, as is usually done on unwind stands and sometimes on windup stands. Unwind stands are moved laterally to keep the web centerline paying off the supply roll near or on the machine centerline. Rewind or windup stands are moved laterally to maintain straighter sides on the winding roll when the web edges are not trimmed.

Web guiding between various sections of the machine is usually accomplished by pivoting steering rollers. There are two general types of pivoting steering rollers. One type consists of four rollers, two on a raised rotary table and two fixed for thread-path entry and exit. The other type of steering assembly is the single-roller or double-pivoting rollers.

Web edge sensors are used for feedback control on all types of web steering devices.

Lateral shifting of the unwind and windup stands

Most machines that process master rolls must shift the supply roll laterally during operation to keep the incoming web centerline on or near the machine centerline. Some machines shift the windup stand to keep the winding roll centered under the web centerline rather than steer the web with pivoting guide rollers. While technology for shifting the stands was developed long ago, the following points will help maintain an efficient operation before investing in new capital equipment.

1. An edge sensor is an essential part of this process. Usually, the edge sensor is attached to an adjustable slide to accommodate a full range of web widths. The adjustable slide is attached to the main machine frame on the unwind stand. It is attached to the windup stand frame when used during rewind operations. (See Figure 5.1.)

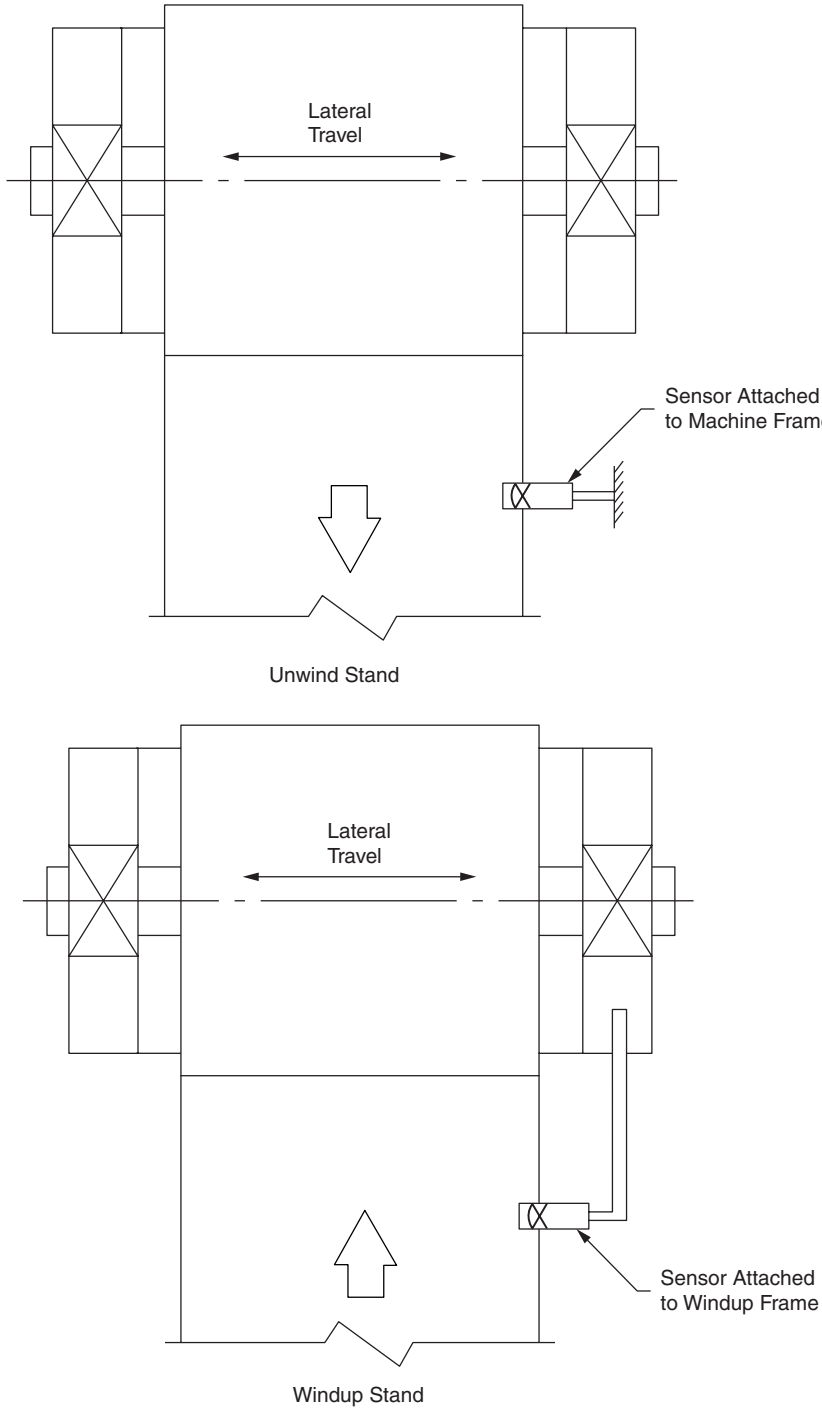

Figure 5.1 Web edge sensors for unwind and windup.

2. On older machines, the edge sensor location must be set manually for any change of product width. New edge sensing technology, using either laser or ultrasound, has permitted the use of a fixed, wide-mouth scanning area for the web edge, obviating manual adjustments when switching product widths within the prescribed limits. These new edge sensors can significantly reduce product waste by reducing operator error in sensor setting. Sometimes it is advantageous to sense both edges at the same time. The new technology can also do this with no manual intervention. Some new sensors also have an adjustable operating dead band that will allow a small amount of web change with no shift of the actuator controls. The dead band adds stability to the web-handling process. Over control should always be avoided, because it tends to cause wrinkles in the web. When the stand is made to shift laterally, there are unbalanced tracking and resistance forces acting on the web. These forces require a finite time to realign themselves after each shift. Wrinkles that tend to form in the web dissipate quickly when there is time for the resistance and tracking forces to become aligned. However, constant shifting can keep the tracking and resistance forces unbalanced and web wrinkles will move on through the machine.
3. Web edge stability is an important issue for sensing edges on thin web materials as they unwind. The edge sensor location is critical for good control. There should be two web support rollers, one on each side of the sensor and as close to the sensor as possible, with at least 90° of wrap to reduce web flutter in the sensing area. The supply roll should payoff to a first roller that fixes the wrap on the entry roller to the sensor. The exit roller should payoff to the dancer roller. (See Figure 5.2.)

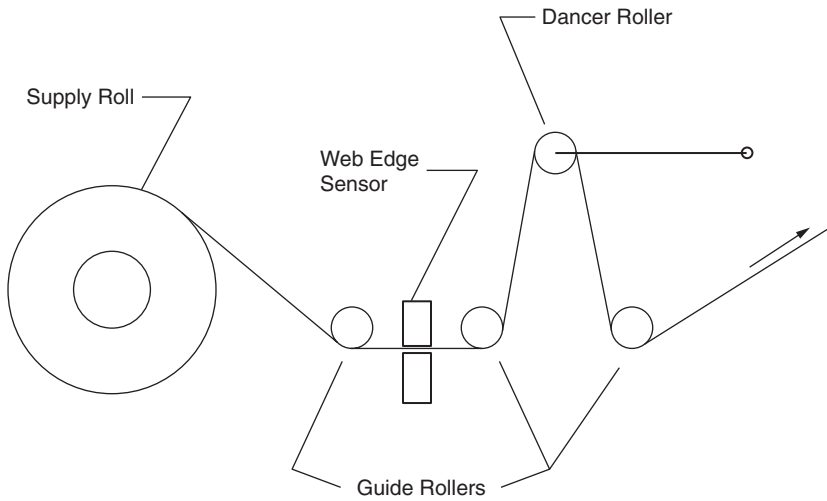

Figure 5.2 Edge sensor thread path on unwind.

4. The actuator mechanism is another essential part. Usually there is a large amount of mass to be moved quickly in a smooth and controlled manner. Hydraulic actuators are preferable because of the amount of force that can be applied, and because they can be controlled in a smooth and accurate manner.
5. Attaching the actuator to the movable carriage is another important issue. The ideal location is at the center of mass on the moving machine. Any other location will cause a torque to be applied to the machine when the shifting actuator attempts to change the momentum of the machine. However, often it is very inconvenient, if not impossible, to attach a side-thrusting actuator to the center of mass of any unwind or windup machine. Thus a compromise must be made that has the least negative results. The next best place for attachment is on a vertical projection from the center of mass in the cross section or MD plane. Sometimes it is necessary to attach the actuator on the vertical projection but below the bottom plane of the machine. Torque in the TD plane caused by shifting actuator thrust is opposed by the machine ways. When the attaching point is at or on a vertically projected point of the center of mass in the MD plane, torque in the MD plane is opposed by the machine ways. The web will stay stable in its thread path regardless of a shift in velocity or direction when there is very little tolerance in the guide rollers or bearings. Torque generated during reversal of thrust is hardly notable. But as the equipment wears with service, the tolerances increase and the alignment error of the unwind or wind stands during thrust shifts will be significant. Correct placement of the attachment point will assure good web stability during transverse movement of unwind or windup stands.
6. Regarding actuator anchor attachment, there must be joints in the linkage that allow the cylinder to wobble as the piston moves back and forth. A cylinder requires at least 2° of freedom as the piston moves to prevent binding of the mechanism. Binding causes a stick slip, or jerky, movement of the stand that is undesirable because jerky movements can cause wrinkles in the web.
7. The ways are also an important part of the lateral shifting process. Because of the mass involved and the necessary location of the ways, certain types of bearing guides should be avoided. Usually, the ways work in an unclean environment and are hard to reach for maintenance purposes. Therefore, they should be robust enough to work from one shutdown to another without problems. "V" cut guide wheels are not advisable for longevity. Poor tolerance control and contamination on guide rails result in considerable shifting of alignment of the machine during the thrust reverse process. Also, linear ball bearings on hardened shaves do not perform well under long-term, heavy loads because of the contamination problem. When linear bearings are used, boots or jackets should cover all

stationary rail surfaces, to the extent possible, to reduce the contamination problems over time. The bearings should be oversized to improve bearing life.

8. High-speed coating machines require that the sensitivity of the sensor and the control system be set high and yet be stable after the disturbance. A master supply roll is seldom wound exactly in the same lateral position on the core as the last roll. There are many reasons for these different placements. The most prevalent is that supply rolls are not wound on their cores uniformly, even from the same supplier. Also, mandrels are usually mounted in the new supply rolls manually, some even at other locations in the plant, and there are errors in roll location on the mandrels. For these reasons, a coating machine unwind stand must shift location rapidly when a new supply roll is spliced onto a running web (flying splice). Haste is in order to prevent operating out of the previous thread path for any length of time and possible edge quality problems.

Pivoting steering/guide rollers

Steering rollers are used to keep the web on the machine centerline. They are usually installed at the exit of a web-processing station, such as a drying oven, where the process tends to skew the tension resistant members so that they become non-aligned with the MD and the web tends to track away from the machine centerline. Steering rollers should be wrapped 90° for best results, and they should be textured to provide a reservoir for boundary air that clings to the web and roller surfaces. The knurled surfaces described in Chapter 1 work well on steering rollers. Surface texturing should never interfere with web tracking. Never use spiral-cut grooves for steering rollers on light-gage webs. Surfaces of this type tend to cause wrinkles in the web during the guiding process because the MD tension tends to pull the web into the roller grooves. Transverse grooves are acceptable for steering roller application as long as they meet the requirements for not marking the web. The equipment configuration and web thread path determines the type of steering system that can be used. Figure 5.3 shows a typical single steering roller setup. Single steering rollers work best on long spans where the tension changes across the web during roller alignment shifting are diminished by the length of span. (See Equation 1.6) for tension span relationship.

Steering rollers pivot in the plane of the incoming web. The pivot point in that plane may be upstream a distance of many web widths. A long pivot radius reduces the severity of tracking disturbance when the steering roller shifts during the guiding process. The exit span does not need to be as long as the entrance span because the web is really just slightly twisted about its center axis in this span. After the steering roller there is very little tracking disturbance on the support roller provided the web makes a 90° wrap on the steering roller. The web should also wrap the exit support roller by 90°.

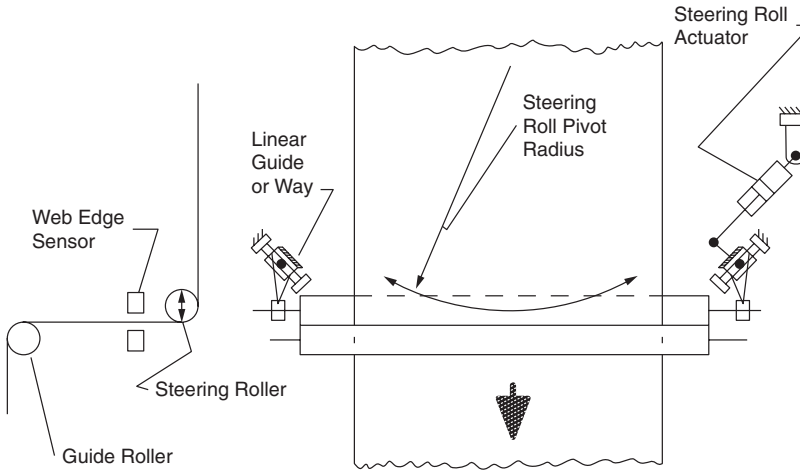

Figure 5.3 Steering roller action and thread path.

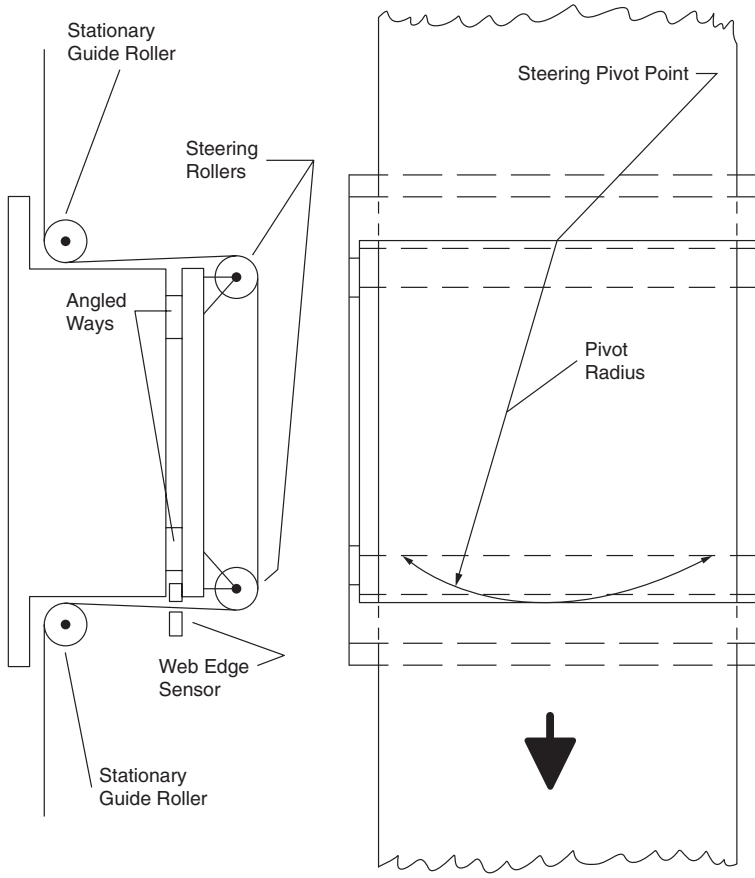

Figure 5.4 Four-roller, raised table, web-steering assembly.

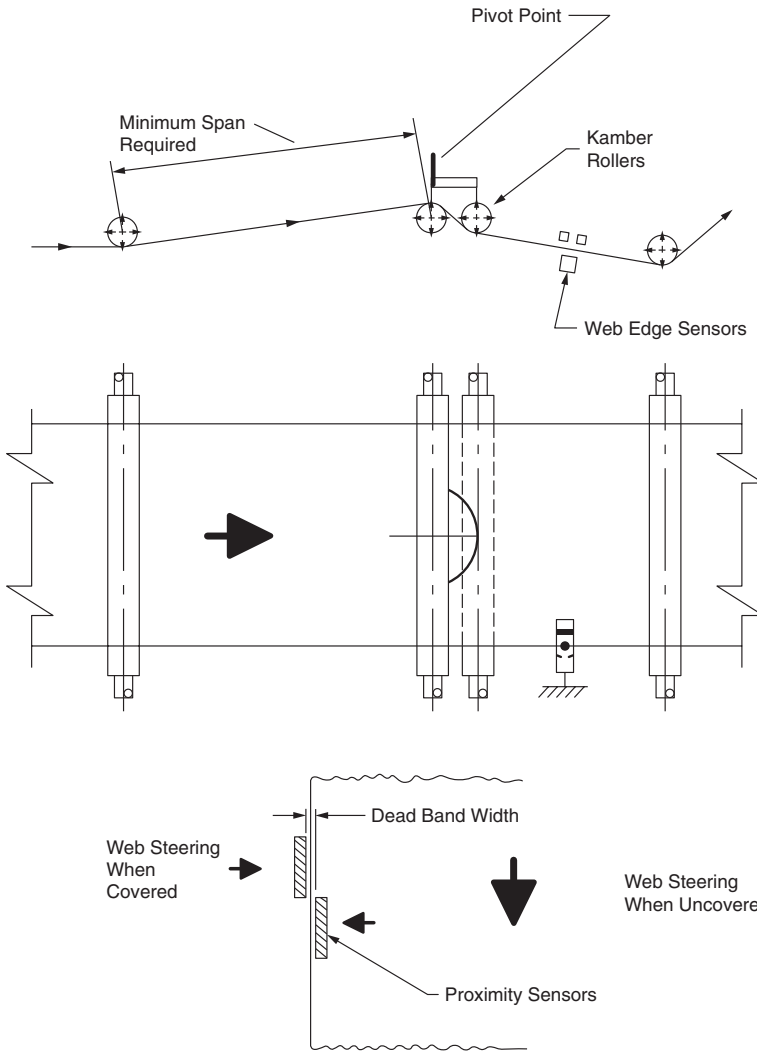

Figure 5.5 In-line, two-roller steering assembly.

Care must be taken to maintain a stable web on the steering roller. Machine draw between zones must be stable to keep the web from fluttering on the steering roller. A load-cell roller just after the exit span roller is very helpful in maintaining a stable web on the steering roller. Also, sometimes it is advisable to dampen the edge sensor output signal to help improve the web stability over the steering span. In any case, the steering roller should not move quickly in its pivoting movement.

The raised table, four-roller steering system may be used in shorter web spans for web guiding. Figure 5.4 shows a typical system. The raised table pivots the two rollers in the top web plane in much the same way as

the single steering roller pivoted in the incoming web plane. However, the pivot point for the top table may be directly under the center of the first top roller instead of many web widths upstream at an imaginary point in space. The table may rotate on angled ways under the second roller or it may rotate on a single pedestal. Table rotation will put a small twist in the incoming vertical web span, while the second roller tracks the web to correct web thread-path alignment.

Another configuration is available for in-line thread-path alignment. This system uses two "S" wrapped pivoting rollers for web guiding. These rollers are usually mounted close together on the same pivoting frame. Usually, the frame is mounted on angled ways that pivot in the plane of the web several web widths upstream. Figure 5.5 shows a typical in-line setup.

The advantage of this configuration is that the web can be guided without moving very far out of the thread path. The disadvantage is that the web must be capable of being touched on both sides during the guiding process.

chapter six

Static management

Charge buildup theory

The outer-ring electrons of dielectric materials do not move freely between molecules, but they will escape from their exposed surfaces to satisfy an external electrical field. These materials also allow electric lines of force to pass through their mass to an electric field on the other side. These two phenomena are responsible for charge buildup on dielectric materials. There is always an exchange of electrons across the interface of dielectric webs in contact with each other or in contact with any guide material.

When webs separate surface contact from either themselves or any guide or roller surface in a web handling process, there will likely be an uneven balance of charges on the web. There is no way to predict whether the molecules of contacting materials will gain or lose electrons at any particular instant of separation. Tests with powders that show type of charge by turning different colors show very complicated and intertwined patterns of charge distribution.

Very smooth surface webs are most vulnerable to charge buildup because they have a large web-to-web surface area in contact during the winding process. There is always some relative motion between wraps in all types of winding processes. Relative motion between wraps causes patches of charges to be isolated on the web surfaces.

When patches of charges are wound into a roll, they influence electron migration across wrap interfaces by creating electric fields. These electric fields may extend through several adjacent wrap layers. Dipoles are sometimes formed in the adjacent web matrixes from these electric fields. The dipoles do not generate external fields because each internal charge is balanced by an opposing charge.

As the roll is further wound, stronger electric fields are produced from these enhanced charge areas, and they attract more migration of electrons across the surface areas affected by the stronger electric fields. After many wraps have been wound, substantial surface charge is accumulated on each side of each wrap in these areas.

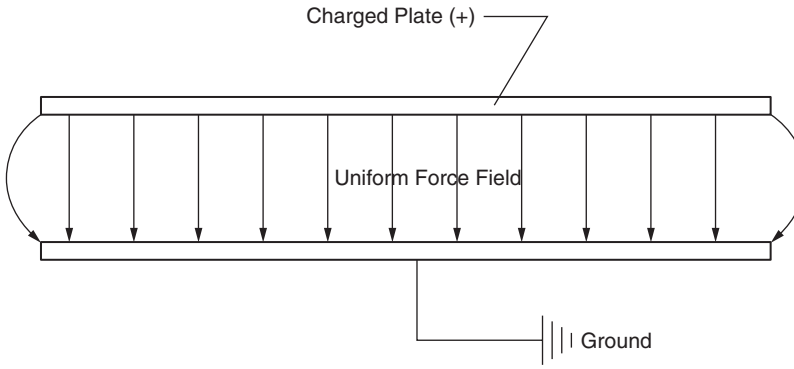

Figure 6.1 Uniform electric field.

When the roll is unwound, rapid separation of the wrap leaves many charges isolated on the web surface. After separation, these electric fields attract charges from any adjacent source. Often the field strength from these charges is large enough to cause breakdown of the dielectric strength of the atmosphere between the charges soon after the web separates from the unwind roll. When this happens, discharge arcing may be seen where the web approaches the machine frame. Often, there is discharging at the disembarkation point of a roller guide under the departing web. Arcing results because the charges in motion create a localized current that is extinguished rapidly as the web moves away. Voltage rises rapidly and the electric field lines become so intense that an arc discharges the energy that was stored in the electric fields.

There are two types of electric fields, uniform and nonuniform. A uniform field is one that is brought about by charging two flat plates of equal dimensions and separated by uniform distance at all points. The electric field lines in a uniform field are equally spaced between the plates except at the plate edges where they bow outward. A nonuniform field is created when a point is charged over a flat plate. The electric field lines converge from the plate to the point. Figures 6.1 and 6.2 show uniform and nonuniform electric fields, respectively.

It is important to note that these electric field lines do not cross each other. Thus, the electric field becomes very intense as these lines of force converge to the point. Electrons can be dislodged from the atoms of the air molecules by an intense electric field that gives the electrons greater energy. When an electron gains sufficient energy, it breaks free from the molecule and an ion, or charged molecule, is formed.

The ions are motivated by the electric field to move, following the electric lines of force to the attracting electrode. However, they move relatively slowly compared to free electrons that have enhanced energy from the intense electric field. The free electrons are also influenced by the electric field and move toward an attracting electrode, usually in the opposite direction as the newly formed ions.

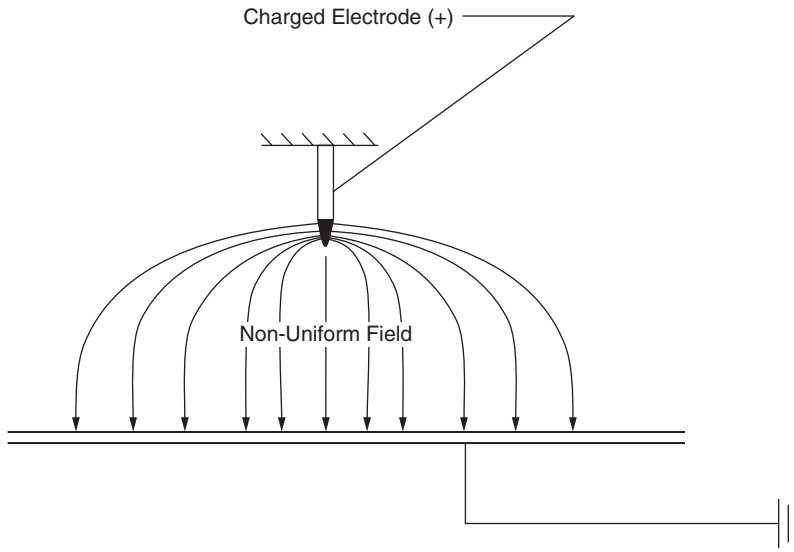

Figure 6.2 Nonuniform electric field.

When there are many ions being formed in an intense field, there is a high probability of collision between a free electron and another molecule or ion of air. Usually, these collisions dislodge more electrons and generate more ions. When a free electron is captured by another molecule or ion molecule, its energy state falls to the level it had before it was dislodged, emitting a violet photon when the electron changes state to balance the energy level of the process.

Stable ion generation requires that the numbers of free electrons making ions does not exceed the dielectric breakdown strength threshold of the atmosphere. Every nonconductor has a breakdown strength threshold. Breakdown of dry air is about 70 V/mil separation of electrodes in a uniform field. Atmosphere breakdown occurs when the electric field is so intense that electrons, highly energized by the intense field strength, begin to collide with enough intensity to dislodge other electrons from the air molecules to the extent that a chain reaction occurs. This results in a conductive channel of electrons that flows to the attracting field and discharges the fields. This creates a discharge arc. These events happen very quickly as the web separates from a roller surface.

Charges also may be enhanced on a web surface when the web passes over rollers or stationary web guides. When sufficient charge builds up, the charges will provide enough field strength to break down the dielectric field strength of the air and discharge in an arc to an attracting field near the web.

Some processes are sensitive to dipolar charges in the web matrix. Because dipoles exhibit no external field, simple devices that remove charges on the web surface do not remove dipole charges. Charges on the web surface that form the dipoles can only be discharged by making a conductive atmo-

sphere completely around the web. A conductive atmosphere allows the charges to be transported from one side to the other to satisfy the electric fields. Dipping the web in a conductive liquid such as isopropyl alcohol is one method of eliminating dipolar surface charges. Gaseous atmospheres must be ionized to be conductive.

Static removal from webs

The following points should be reviewed before investing in static removal equipment:

- Charge cannot be conducted off the web by a roller surface or any other device. The atmosphere must be ionized near the surface charge to discharge the electric fields on the web.
- Charges must be removed on both sides of the web before it is wound into a roll. Charges should be removed within about 3 in. of the last supporting roller surface that each side of the web has touched.
- Grounded passive static removal equipment, such as strands of tinsel, braids of conductive materials with multiple sharp points, and brushes of conductive thin bristles, are slow web speed devices and all work similarly. Sometimes one kind is more efficient than the other two, but most of the inefficiencies can be traced to how these devices are employed.

The small points or radii on the devices create nonuniform electric fields with the charges on the web. When these nonuniform electric fields are strong enough, ions will be created from molecules in the atmosphere near the points. The ions will flow to the field of charges following the lines of force and discharge some of the charges on the web.

These devices are widely used but not well understood by the users. The most common misconception is that the device conducts the charge directly off the web. However, these devices will only lower static charge to a minimum level, usually not lower than one kV, on slow speed processes (up to 200 ft/min). For best results, the devices should be suspended $^1/_8$ to $^1/_4$ in. from the web surface for the entire span across the web. Touching the web does not remove charges and may scratch the web surface. Static is removed when tinsel is laid on the web, but only by the points that are slightly above the surface and not by the parts that are touching the surface. A support bar is required to hold these types of devices in the proper location for maximum efficiency.

These devices should be placed on both sides of the web within 3 in. of the last guide roller surface that the web has touched. The efficiency of these devices varies directly with the charge field intensity. The field intensity varies with the inverse square of the separation distance according to the following formula:

$$\text{Field Intensity } (\varepsilon) = (F_e \times Q)/d^2 \tag{6.1}$$

where F_e = electric force from the charge, Q = charge on the web, and d = distance from web charges to the point on the device.

Powered AC devices operating at a frequency of 60 Hz and 6 to 8 kV tension work well at higher speeds (up to 1000 ft./min). Devices operating at radio frequency (5 to 15 kHz) at the same voltage can remove static at much faster speeds. Such devices ionize the atmosphere surrounding sharp points that create nonuniform electric fields with a grounded base electrode.

There are many types and configurations of the base electrode. Some devices ground the sharp points and energize the broad base electrode. The base electrode is covered with an insulating material in this case. Ions are generated at the points regardless of which electrode is energized. Ionization of dry air begins about 5.8 kV provided the ground electrode is about $^1/_4$ in. from the high-tension electrode. More voltage is required to ionize the air as the distance is increased between the electrodes. For best results, the points should be placed between $^1/_2$ and $^3/_4$ in. away from the web to take advantage of the electric field force on the web.

When external fields are used to produce ions, most will follow the electric field lines to the ground electrode unless the source of the ions is close to the charge field on the web. Electric field lines do not cross when multiple fields exist on the web. Thus, the web must be close enough to the ion source so that the charge fields on the web can capture enough charges to satisfy the charges on the web.

Powered devices that use the charges on the web for creating the base field are more efficient than those that have both electrodes on the same side of the web. A thin piano wire (0.006 to 0.010 in.) and a knife-edge electrode are examples of such devices.

Powered devices that create electric fields through the web can be even more effective than the devices mentioned. These devices can transport ions a greater distance because the artificial field is much stronger than the fields on the web.

Nuclear-powered devices are not able to remove large numbers of charges at high speeds due to the limited number of radiation events per second emitted from the radioactive source. These devices should be used on relatively slow processes where arcing is a hazard. Also, these devices must be registered with the EPA and their location known at all times for reporting purposes. The radioactive source in these devices has a very long half-life.

When they are correctly chosen for the process and operated correctly, powered devices will lower the static charge on the web below the ability to measure with a meter on most processes. However, each new machine on which the web is processed must also remove static before rewinding into production rolls. Figure 6.3 shows one concept for static removal.

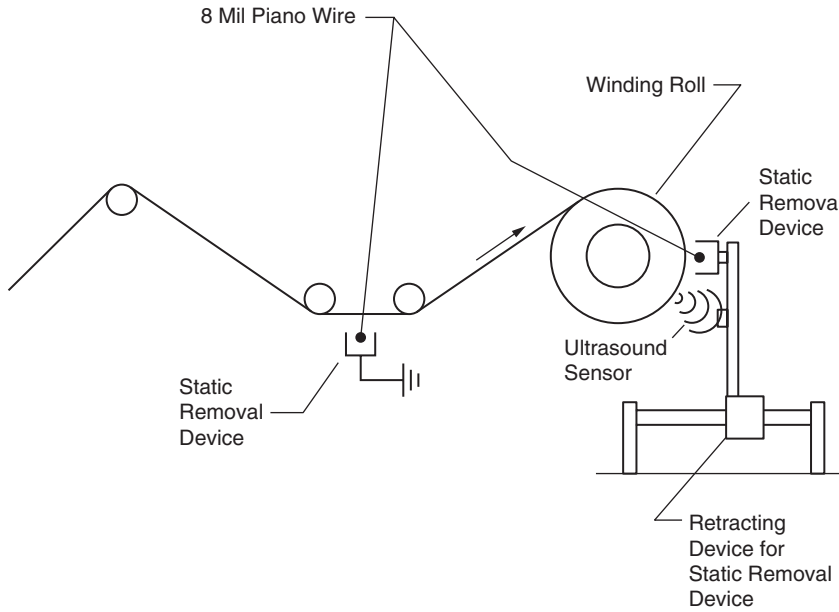

Figure 6.3 Electrostatic charge removal before windup.

section two

chapter seven

Slitting technology

Razor-blade slitting

The use of razor blades to slit webs into more narrow widths or to remove edge trim is still practiced on many converting machines today. Razor slitting is economical and easy for the operator to use. On many products, razor slitting is best suited to slower processes (< 1000 ft/min). Problems that occur with higher speeds usually involve blade dulling and contamination buildup on the blade. There are many new types of blade products, but simply changing the type of blade in a machine may not solve a specific slitting problem. This section discusses the problems associated with razor-blade slitting and recommends solutions for some of the problems.

Bell or raised edges

When plastic webs are slit with a razor blade, the edges tend to thicken. This is due to resistance set up by the stationary blade and the fact that the plastic material is usually not brittle. Thus, there is flow in the plastic at the point of resistance. The thickening process can be visualized by comparing the slitting with a blade to a rock that is dividing a stream of water. The water height increases along the projected frontal area of the rock as the stream moves past. However, unlike water, the plastic web material is not liquid and is not free to flow back together and form the same thickness it once had after it has passed the obstruction, so the increased thickness remains at the web edges. The mass flow is balanced at all times because the blade reduces the slit width of each slit web by a very small amount as it compresses an equal amount of polymer material into the slit web edges. Thicker edges increase the buildup radius of the slit roll edges and are responsible for many winding problems.

- One problem is that the raised roll edges support the lay-on roller because of their larger radius. When the roll edges absorb most of the lay-on roller pressure, the balance of the slit-roll surface does not receive sufficient pressure to exclude the proper amount of boundary

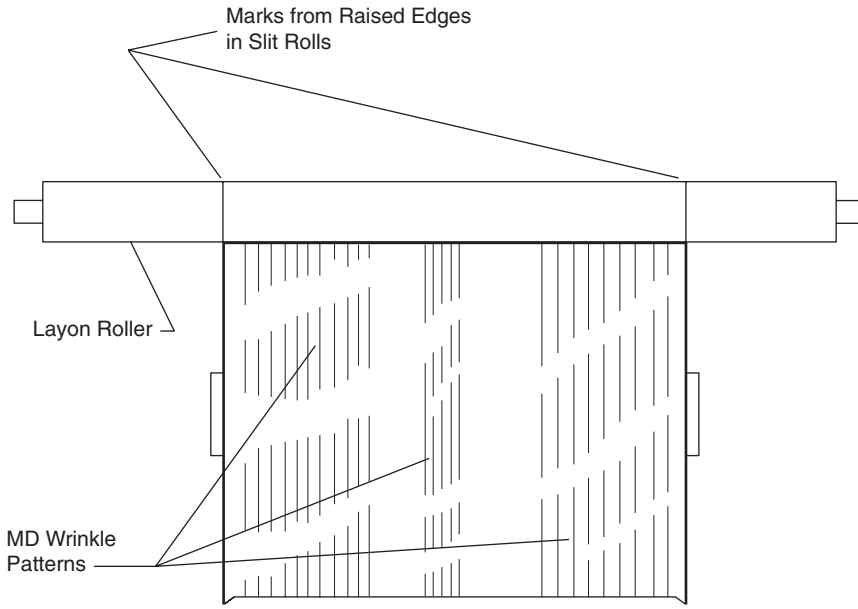

Figure 7.1 Winding defects from raised edges on wound rolls.

air. This may lead to MD type wrinkles in the slit rolls. (See Figure 7.1.)

- Another problem is that the increased pressure at the slit-roll edges will abrade the lay-on roller cover. When wider slit rolls are run with lay-on rollers that have been grooved by narrower slit rolls with raised edges, excessive boundary air is entrapped at the worn areas. This results in narrow bands of defects at the worn area locations in the slit roll products. (See Figure 7.2.)
- Still another problem is the effect of increased compression pressure on the slit-roll edges during the winding process. There is always some debris generated by razor-blade slitting. As the web is pulled past the blade, strands of polymer are torn from the matrix by the plowing action of the blade. These strands experience tension before they are sheared or broken at their anchor points in the web matrix. The free pieces tend to curl into tiny balls as the tension is suddenly removed. And the moment they break loose they are thrown outward by elastic forces generated by the cutting process. Because of the relative motion that occurs during their formation, there is usually an electrostatic charge applied to these particles. Slitting-debris particles are discharged from both sides of the cut, and because of their electrostatic charges they are attracted to any electrostatic field that may exist on either side of the web material. The highest particle density is usually found near the cut edge. However, particles may be found several inches from the edge toward the slit roll centerline.

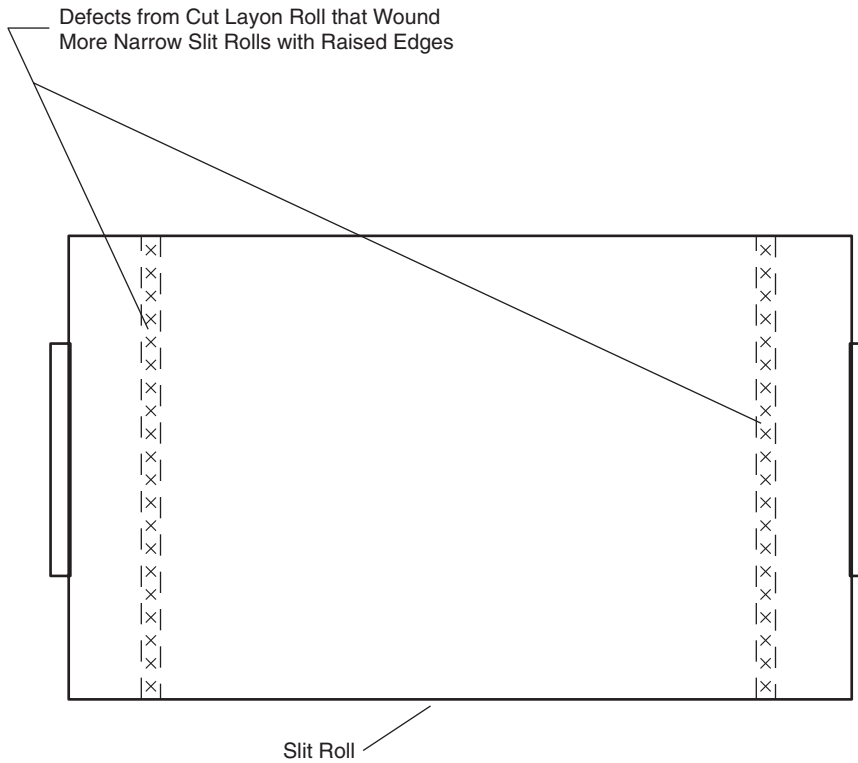

Figure 7.2 Defects in wound rolls from raised roll edges.

Their final location depends on what electric force fields existed in the area when the particles broke free. Increased contact pressure in these areas due to increased edge radius tends to create bumps or slip pimples on the slit-roll edge. Bumps or knots generated this way tend to grow as the slit-roll builds. The mechanism for this phenomenon is discussed in Chapter 8.

One way to prevent problems with thickened edges is to use two single-bevel blades mounted with the bevels opposed and cut a very narrow strip of waste trim that must be removed between the mitered cuts. This process is known as "slitting bleed trim from the web." The flat side of the blades must face the production web edge and the bevel sides must face the waste trim. (See Figure 7.3.)

A thick blade of very stiff material is required to prevent blade vibration and/or deflection when slitting webs that have high shear strength. Tungsten carbide is a good material for these types of blades because it is very stiff. The blades should be about 0.040 in. thick to prevent breakage from the lateral forces during slitting and web breaks. The blade holder must also be able to resist the lateral deflection thrust forces generated as the web moves

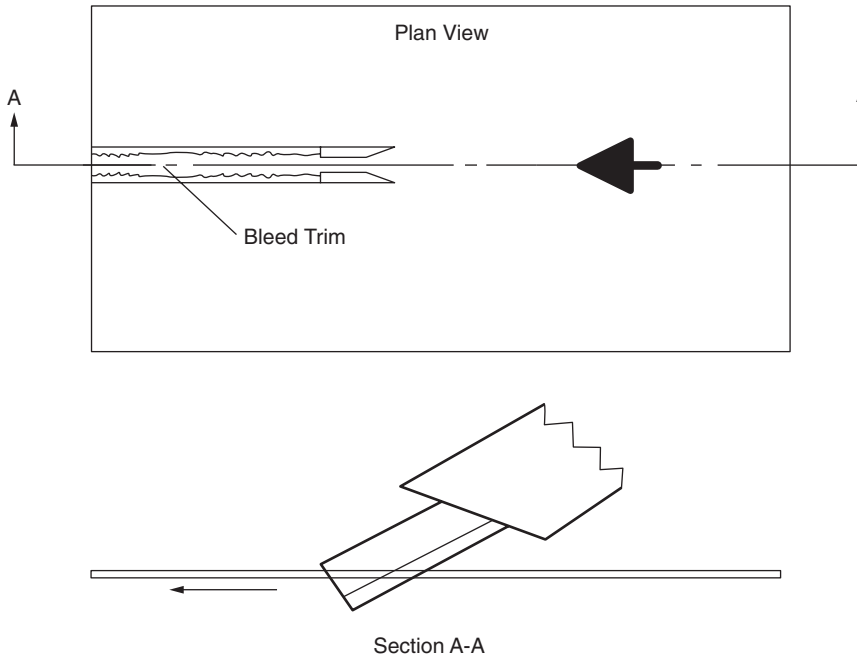

Figure 7.3 Bleed trim cutting with a pair of single bevel slitter blades.

past the blade. This technique produces mitered edges and flat surfaces on the production rolls at the expense of a small amount of waste trim removed between the cuts.

Thickened edges are not reduced when a grooved or slotted roller is used as an anvil roller for the blades. The very same compression around the blade occurs during the cutting process. The disadvantage of slotted anvil rollers is that the web may be marked as it is depressed into the slot by the blade. Another disadvantage of slitting in a slot is that the cutting angle the blade makes with the plane of the film cannot be easily changed with product thickness changes.

Blade angles and configuration

The angle that the cutting edge forms with the web is an important parameter in razor slitting. Generally, for any type of material the angle increases as the web thickness increases. This is because the blade tends to depress the web farther from the thread path as the shearing resistance force is increased.

There are special cases where the optimum angle is 90°. One such case is slitting non-oriented cast webs. The optimum blade for this operation is a sickle-shaped blade. The web is maintained in the desired thread path when the tangent of the cutting curve of the blade is 90° to the desired thread path. The blade angles in Table 7. 1 work well for razor-slitting PET film and similar webs. (See Figure 7.4.)

Table 7.1

Web Thickness, mils	Blade Angle,°
< 1/2	30 –40
1/2–1 1/2	40–50
1 1/2–3	50–60
3–5	60–70
5–10	70–75

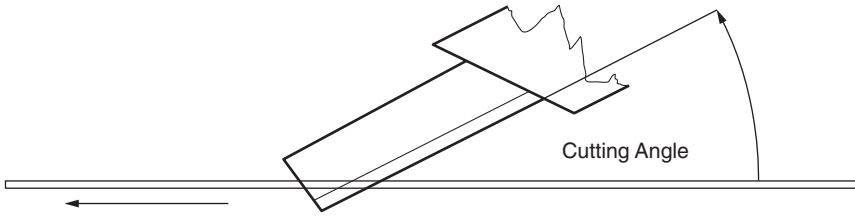

Figure 7.4 Slitter blade cutting angle.

Optimum blade angles must be determined by trial and error for webs with very different shear strengths. However, you may find that the above table is adequate for materials similar to PET.

Blade thickness and contamination generation

Debris generation can be minimized during razor slitting by frequently changing the blades. However, this is not practical on many products because of time constraints. In situations like this, hard-coated blades can extend the blade life 2 to 3× and reduce machine downtime. Using hard-coated thin blades of tough materials is more effective at reducing edge thickening than using thicker blades of harder material such as tungsten carbide. This is because harder materials require thicker blades to prevent breaking from bending forces that occur during web breaks, etc. The thicker blades block more material flow than thin ones and therefore compress more web material into the edges.

Heat is generated by the shearing action when the web passes by the blade. This heat is dissipated through the blade to the holder and the machine frame; also some of the heat is radiated to the atmosphere, but much of this heat energy softens the web at the point of the cut. The temperature at the point of cut can be near or above the glass transition (T_G) point of the web material, and the particles that are torn loose become quite tacky. As a result, there is a buildup of residue on the blade at the point of cut. This buildup further assists in the web-edge thickening process.

Web temperature can be a significant variable during the slitting process. Webs that are above room temperature add to the blade fouling previously described. Webs that must be slit immediately after a heat-treating process should be cooled to nearly room temperature before the

slitting section. Also, web temperature reduces the yield point of the web material and the web is more easily permanently deformed during the slitting process. Web elongation effects are discussed later in this chapter under "Slitting Tension Effects."

Debris generation may also be minimized by oscillating the slitter blade through the plane of the web during the cutting process. Details for this type of slitter blade oscillation are outlined in the following section.

Blade oscillation

One method of extending blade life and reducing web-edge thickening is to install devices that oscillate the slitter blade into and out of the web plane. A small movement of $^1/_4$ in. into and out of the web can extend blade life 4 to 5×. Larger movement exposes more cutting surface to the web and extends the blade life in proportion to the amount of blade surface exposed to the web.

The oscillation system must be very sturdy to maintain good alignment when the blade is oscillating. Many new slitting machines have some kind of blade oscillation. Figure 7.5 shows a simple illustration of an oscillating device for individual slitter blades. Circular, free-wheeling type blades expose all their cutting edge to the web. These types work well and have a long life where the web is easily penetrated during blade insertion, but they must be used with an anvil backup roller to penetrate tough webs. Circular

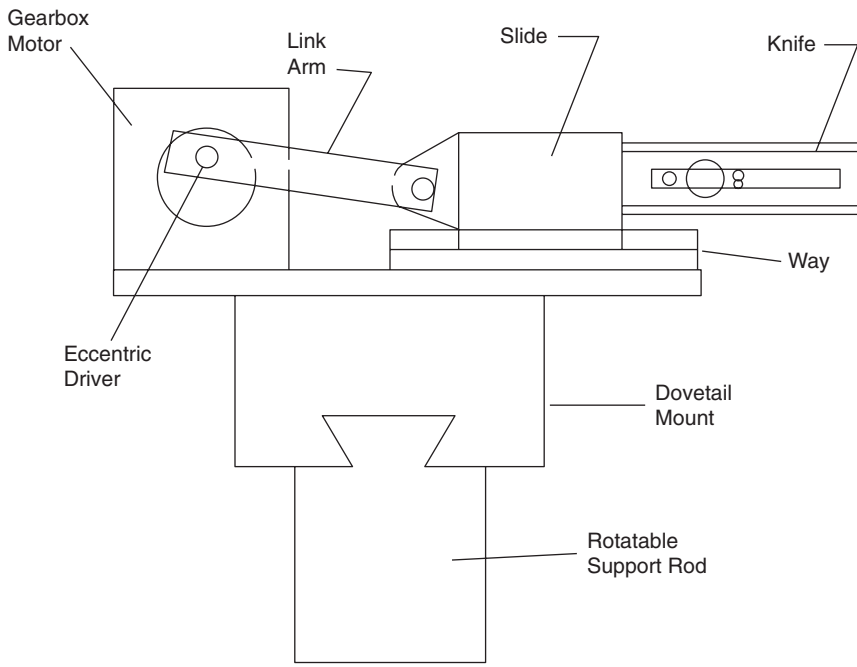

Figure 7.5 Oscillating razor blade slitter assembly.

blades usually require more working span between slitting support rolls than the standard rectangular blades. However, even with superior blade-fouling qualities, web-edge thickening occurs with round blades in the same fashion as with rectangular blades. Also, it is more difficult to adjust the cutting angle with circular blades because the cutting angle is dependent on depth of penetration. An anvil roller may be used to fix the penetration depth at the varying points, but this is not easily done in production processes.

Slitting tension effects

The best web edges are produced when the web is slit at minimum tension. Low tension reduces the amount of elongation in the web at the point of slitting. During slitting, elongation from blade resistance is added to elongation that is required for web control. Often, the extra amount of elongation produced by the slitter blade results in the total elongation that exceeds the yield point of the material, and the web will have wavy edges when it is relaxed. Fouled blades coated with slitter debris exhibit more drag than clean blades and may cause wavy edges when the tension in the slitting zone is at normal levels.

Poor cutting angles may also cause wavy edges because of the amount of deflection from the desired thread path required to shear the web. Greater deflection requires a longer thread path at the web edges than the rest of the web. Also, alignment of the blades with the MD is critical. Blades that are out of alignment tend to exert excessive tension at the point of cut and often produce a wavy edge.

One way to achieve low-tension slitting is to isolate the web tension on either side of the slitter section. Driven vacuum rollers work well for tension isolation. (See Figure 7.6.)

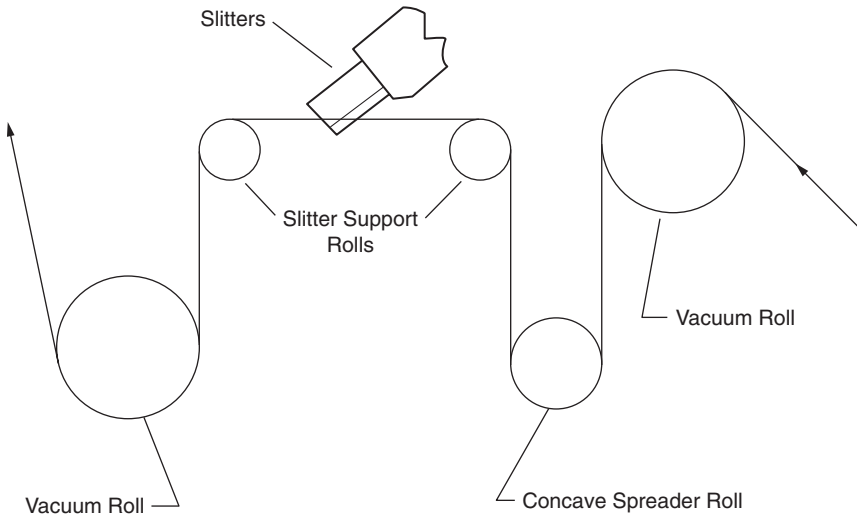

Figure 7.6. Tension isolation for razor slitting.

Shear knife slitting

Shear slitting is superior to razor slitting in most slitting applications, especially at speeds greater than 1000 ft/min. It tends to generate less slitting debris and less edge thickening than razor slitting. Also, shear slitting usually results in a more accurate edge cut than razor slitting. Although shear slitting causes less downtime for blade changes, it is more complicated and expensive than razor blade slitting.

Shear knife setup

Proper setup of the shear knives is paramount for successful operation. For the best cutting, the web must be supported by the anvil roller where the male knife first touches the web. The male knife axis must be offset slightly downstream from the touchdown tangent of the web on the anvil roller so that the web is not deviated from its thread path as the shearing process begins. The shearing process begins precisely when the male knife starts to penetrate the anvil roller groove. Debris may be formed as the male knife rubs diagonally across the web edge during its rotation. A small wrap of web on the anvil roller minimizes the amount of rubbing where the male knife is exposed to the web edge after the cut. Figure 7.7 illustrates this type of thread-path configuration, which is called wrap shear slitting. Kiss shear slitting is sometimes used, but this type of setup exposes more male blade to the web edge (more edge rubbing) than wrap shear slitting when the

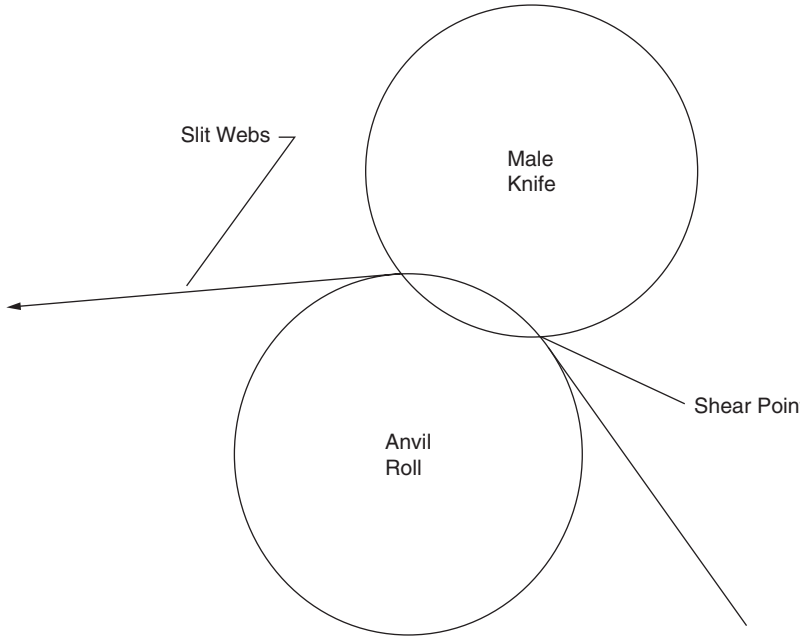

Figure 7.7 Shear knife bar positions for wrap shear.

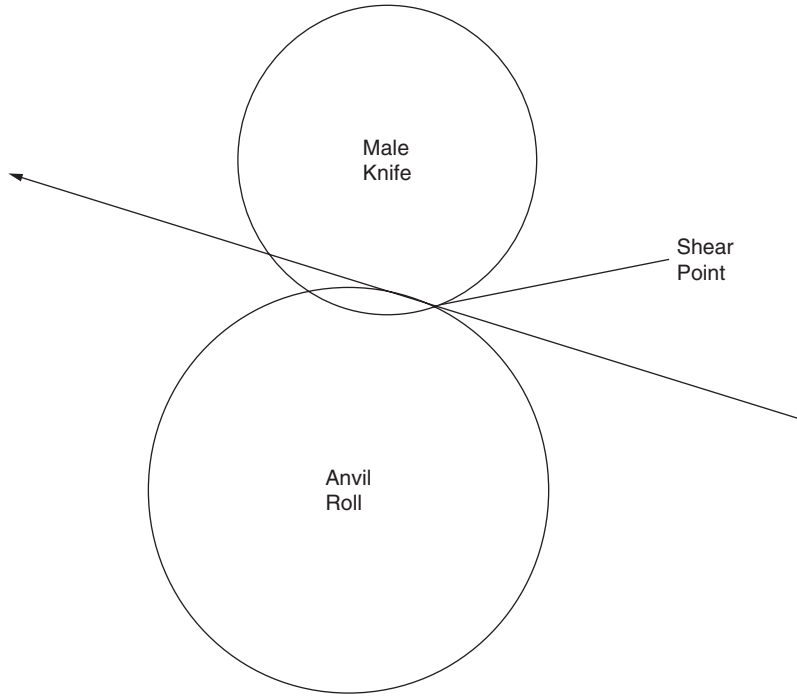

Figure 7.8 Shear knife bar positions for kiss shear.

shearing point is correctly set. Kiss shear slitting is not recommended for tough, thin thermoplastic films because more exposure to the rotating knife increases abrasion and debris on the web edge. Figure 7.8 illustrates kiss shear slitting. Penetration of the male knives should be minimized to reduce the male knife's exposure to the web edge. Smaller diameter male knives may be set for less penetration than larger diameter ones and still meet the location requirement for optimum shearing. The optimum male blade diameter for a machine must be determined by learning where the optimum operating depth is for specific products.

The male knife cant (axis alignment in the plan view) angle, rake (axis alignment in the elevation view) angle, and blade-side thrust pressure are also very important parameters for optimum shear cutting. Because of the many concepts governing the designs of the male knives and anvil roller grooves, it is best to follow the specific manufacturers' recommendations concerning shear knife setup; however, it is important to know that improper setting of the knives for a specific design will cause premature wear and the likely generation of debris and poor edge cut.

Even when properly set up, the beveled side of the male knife sometimes causes a slightly rolled and thickened web with a resulting raised edge on the production slit roll. This negative result mostly occurs on soft, nonoriented webs that cannot recover from the bend during the shearing process.

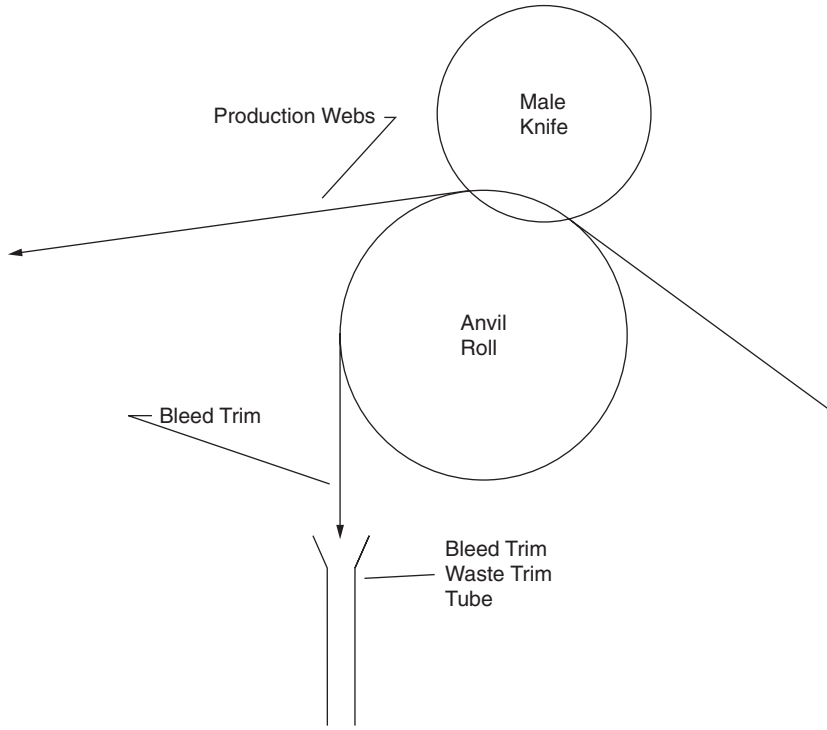

Figure 7.9 Pneumatic bleed trim removal after shear cutting.

Sometimes edge thickening of the production web occurs for the same reason described earlier in the chapter. The web material flow is retarded as the shearing occurs. This problem may be overcome by using two sets of shear knives and anvil rollers, one on the right and one on the left, and by removing a small bleed trim from between the knives after the last anvil roller. Bleed trim removal technique is very similar to that discussed earlier under "Bell or Raised Edges." Figure 7.9 shows one concept for bleed trim removal when using shear knives.

Overspeed settings

The anvil roller rotation speed should equal the web speed during wrap shear. Overspeeding the anvil roller tends to scratch the production web because of relative motion (slip or creep) between the web and the anvil-roller surface. The tension for good slitting should be supplied by the speed differential of the tension isolation rollers on either side of the slitting section. When two slitting roller sets are used to take bleed trim from between the production cuts, there must be a small speed increase on the second anvil roller to prevent slack between the two slitting sections. A small draw of $^1/_2$ to 1% should be sufficient to keep the web taut at the first slitting section and not cause excessive slip on the anvil-roller surface.

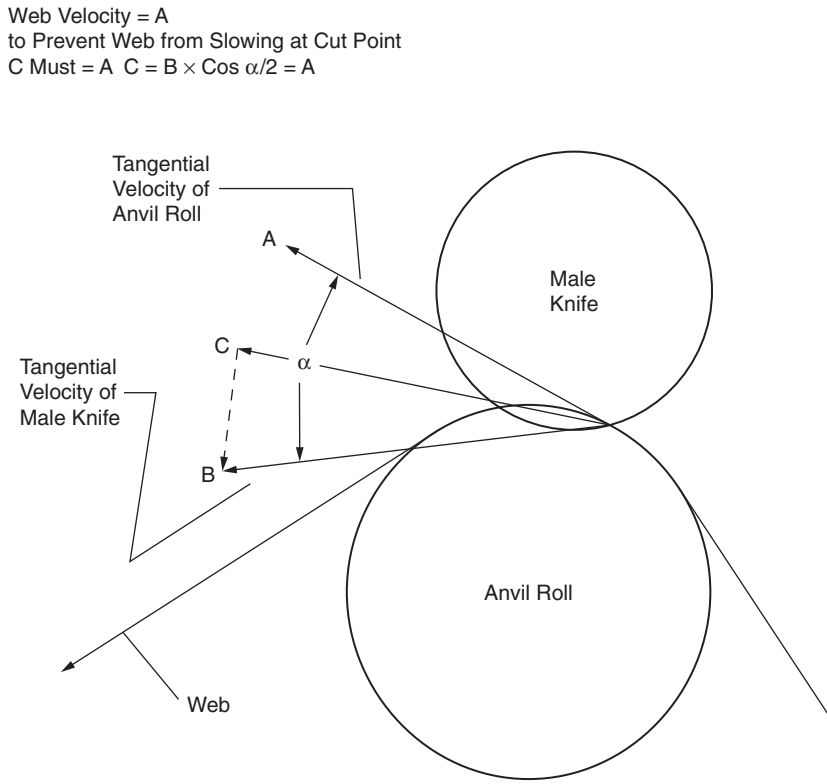

Figure 7.10 Calculations of knife bar positions for wrap shear slitting.

Male knives driven by the web rotate at a slower tangential speed than the anvil roller tangential speed. The greater the penetration of the male knife, the greater the negative differential speed will be. Figure 7.10 illustrates the velocity components at the cut point.

Web-edge thickening increases on the beveled side of the male knife as the negative differential speed between the tangential velocity of the male knife and the anvil roller increases. Thus, the best cut to a product is made when minimum penetration is used with web-driven male knives. There is also less contamination from rubbing at minimum penetration, but there is always some negative speed differential with web-driven knives. Many products do not exhibit much edge thickening when web-driven shear knives are used. However, many do, and driven male knives are available for those products. An analysis of the point of cut is necessary to know how to minimize edge problems on these products with driven male knives.

Figure 7.11 shows a close-up view of the point of cut, in which the web's forward velocity is represented by vector C:

$$C = B \times \cos \alpha/2 \tag{7.1}$$

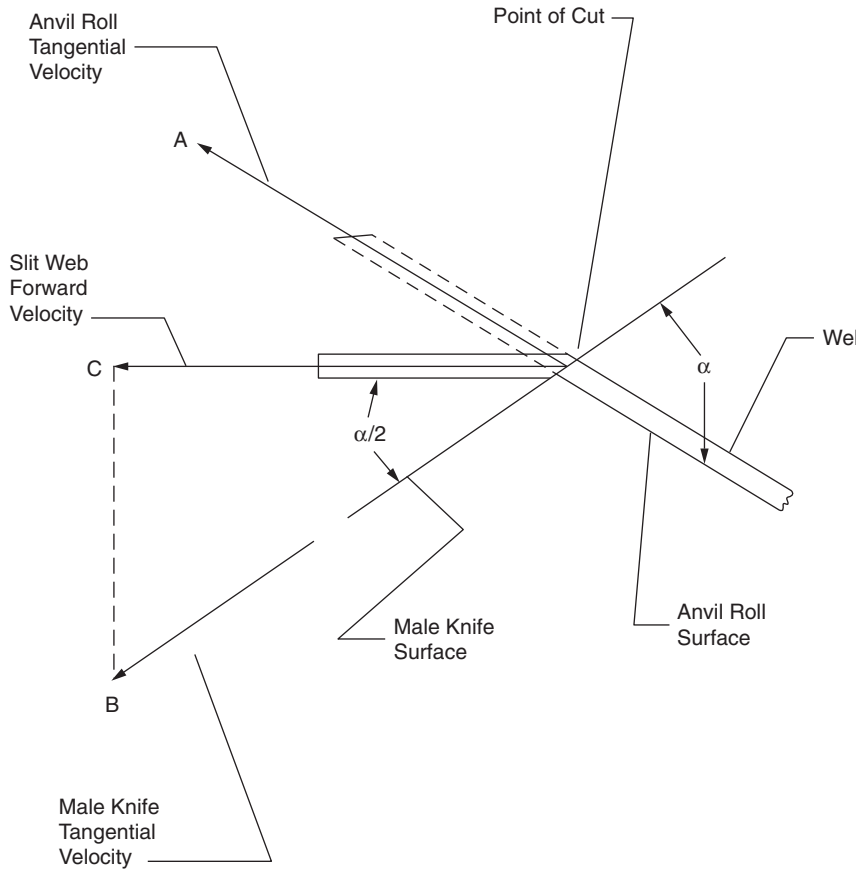

Figure 7.11 Vector diagram for shear slitting.

To prevent the web from slowing at the point of cut, C must equal A (the tangential velocity of the anvil roller). Thus, the correct amount of overspeed of the male knife to prevent slowing of the web on the beveled side of the male knife is given by:

$$\text{When } C = A\text{, male knife tangential speed, } B = A/\cos \alpha/2 \qquad (7.2)$$

Care must be taken to avoid excessive overspeed to prevent contamination generation.

Other slitting techniques

Score slitting works well on products that easily break apart under compressive pressure (crush). Brittle products or products that do not extrude (cold flow) before breaking in compression work best with score slitting. Score slitting does not work well on most thermoplastic webs because most of

these products exhibit cold flow extrusion to some degree. The result is poor edge cut quality, especially in very thin webs of tough materials, when score slitting is tried. The score wheels also mark the anvil roller surface. Thus, clear products usually cannot be run over areas where score knives have been used without being marked.

Like all other slitting methods, score-slitting equipment must be maintained in good condition to perform in an acceptable manner. The score blades must have the required radii and blade angles that are optimum for the products being slit. The blade edges should be polished for smoothness to prevent premature chipping of the surface. Rough blade edges do not crush cleanly and web separation may be incomplete.

Laser and hot-knife slitting are not suitable for cutting thermoplastic webs because these methods melt the web and cause an increase in edge thickness. However, these methods may be used as cutoff devices for webs that are not wound into rolls. There are safety concerns with laser slitting in an industrial surrounding. Hot-knife slitting usually has a high maintenance implication because of degraded polymer buildup on the blades. There is also the safety issue with hot-knife systems.

Water-extraction jet slitting may be used in special situations where razor or shear-knife cutting is prohibited. However, water-jet slitting is expensive and requires much equipment and maintenance, and is usually not suitable for converting operations.

Trim disposal

Trim removal is an integral part of every slitting process. This process can lead to significant production losses when the system does not perform correctly. Trim problems are usually manifested in two major areas:

1. The outside edge quality can be degraded if the production web edge overlaps the trim before separation. When overlap is present there is a high probability that the edge of the production web will be stretched as the trim is diverted into its disposal thread path. Stretching leads to wavy edges and/or raised slit-roll edges. Also, the rubbing action during separation can generate debris and add to the problem of slip pimples near the roll edges. This is very critical on very clear and smooth surface films.
2. Serious production loss may occur when the trim takeoff system breaks down. Often there will be pieces of trim interleaved in the wraps of the outside production rolls after a trim break or stoppage. Sometimes the trim wraps the machine rollers and requires a lockout to remove. When the production rolls must be slit splice free, the entire setup must be reworked, which increases production cost.

Because of the differences in slitting and/or converting machine configurations, each trim takeoff system must be customized for its particular

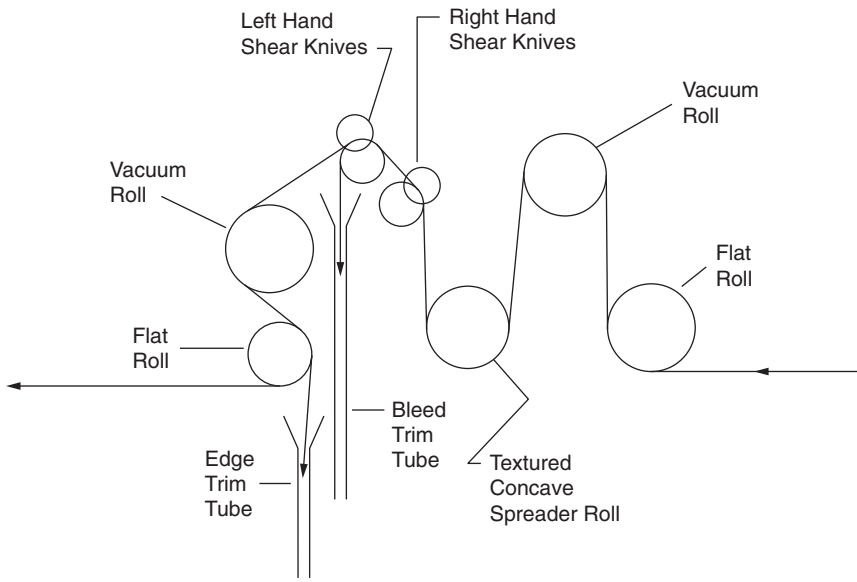

Figure 7.12 Bleed and edge trim removal for mitered shear slitting.

machine. The following basic guidelines can be helpful for any trim takeoff system:

- Trim tension should be kept at the same level as the production roll tension. This is very important to prevent an uneven edge cut. Excessive trim tension is usually the source of ragged edge cuts. Ragged edge cuts are a major source of trim discontinuities because they set up stress points that allow the trims to be torn completely through. Very narrow and/or very thin trims are especially vulnerable to tearing discontinuities from ragged edge cuts. When trim tension is too low there is a high probability that the trim and production web edges will overlap on the machine guide rollers after the slitter knives. Problems with low tension were discussed earlier. Good trim tension control after slitting is required to prevent ragged edge cuts and avoid overlapping of trim and production web edges.
- The trims should be separated as quickly as possible from the production web after slitting to prevent overlapping problems. Mechanical devices that separate the web edge and the trim immediately after the slitter knives are not recommended. Devices such as these may cause excessive abrasion and contamination problems. They also add some friction to the trim and reduce the extent of trim tension control. Figure 7.12 shows one good method of trim removal.
- The trim disposal system is critical to the success of any trim system. There are three usual ways to dispose of the trim.

a. The trims may be wound on cores, on the same mandrel or an adjacent one. Winding the trim promotes good tension control during slitting, provided that the trim roll has good roll formation qualities and the trim roll is essentially the same diameter as the production rolls. Often the edge caliper of the trim is thicker (due to a bad edge cut on the supply roll and/or thicker caliper), and the trim roll builds in diameter faster than the production rolls. Sometimes the trim width is very narrow and the slitter is not capable of winding very narrow, large diameter (pancake) rolls. Production losses occur when a trim roll collapses. The trims may be pulled to the side of the machine with properly placed guide rollers, and wound using traversing, even-wind machines, which build a wide waste roll that will not collapse with large diameter. Care must be taken when specifying the controls for these types of machines to make sure that they will take the trim away with constant tension and not constant torque. A constant torque machine will exhibit a declining trim tension as the waste roll builds, which can lead to poor edge cut on the production web and/or machine stoppage. Also, the trim tension should be easily adjustable by the operator during new setup operations that may make the trims a different width. Avoid pulling trims over stationary guides because of the potential problem of increased friction. Guide friction reduces the trim tension at the slitter blade. The best edge cut is made when the trim and production webs are at the same tension. Also, it is best to feed only one trim to the even-wind waste-roll windups. When the trims are bundled into one rope, they tend to interfere with each other's movement over the guides. Loops may form in one or more ribbons on the guides and cause the trims to snag and break.
b. Pneumatic conveying is a very good way to remove trim from the machine. Tension on the trim from pneumatic conveying tubes is fairly constant regardless of machine speed. Therefore, and where feasible, tension isolation should be between the trim takeoff point and the slitter knives as shown in Figure 7.12. Pneumatic trim tube design must include all of the trim disposal system variables. Design considerations begin with the desired waste density and type of storage where the trim waste will be deposited. Modern trim disposal design usually involves a trim chopper at the machine. It is much easier to convey trim chops than trim ribbons in pneumatic conveying tubes. Chopped trims from the slitting machines may be pneumatically transferred to grinders. The grinders reduce the chops to flakes, which increase the bulk density significantly. The higher density flakes are pneumatically transferred and stored in silo bins that are equipped with air-separation cyclones and bag filters. Many machines may deposit their waste in the same bin. The limiting

variable on any pneumatic conveying/storage system is the amount of air that must be separated from the waste material from all sources from start to finish. Moving air adds cost to production, and therefore must be minimized. The amount of air required for conveying trim from the takeoff at the machine to the chopper can be calculated fairly precisely using empirical values/equations that have been developed for waste-material conveying. Thin web materials convey much easier than thick materials, because they bend more easily with pressure variations in the pneumatic tubes. Trims that are bent from pressure variation present more transverse projected surface area to the moving airstream, and the velocity pressure of the moving air creates more pulling force. Thus, air velocity in the trim tubes must be designed for the maximum web thickness the machine will slit. The maximum volume of air required is related to the width of the tube by the formula:

$$\text{Flow volume} = (\text{tube cross-sectional area} \times \text{required air velocity}) \quad (7.3)$$

Rectangular trim tubes are superior to round tubes for trim ribbon conveying to the first chopping operation, especially trims > 3 in. wide, because round tubes stiffen the ribbon geometrically by bending it transversally into an arc as it moves through the tube. Flat ribbons vibrate at lower air velocity and develop more pull than ribbons formed in an arc at the same air velocity. However, care must be taken in designing rectangular tube bends. Bends in these tubes should never turn in the plane of the widest width. Turns that must be made in this direction should follow a helix curve and exit at a different level. This is necessary to prevent the ribbons from following and rubbing against the narrow side of the tube in the bend where there is little or no pull from the conveying air. When long runs are required to convey ribbons, an "S" bend in the plane of the narrow width every 5 to 8 ft will ensure that the ribbons cross through the airstream where the conveying air has the most effective pulling ability.

Round tubes work fairly well when trims are very narrow, < 3 in., and the web material is not very stiff. "S" bends should also be installed in long, round tube runs.

Estimate the negative pressure required for the flow requirement found by solving Equation 7.3 by using the following method:

- Pick a value for the negative pressure at the tube inlet that can be reasonably achieved with commercial low-pressure blowers. Remember that the value you pick is not the blower top capacity (ΔP). The value you select will be the value left after deducting all losses (pressure rises) in the system; hence the blower will have to have greater ΔP capability to overcome all pressure losses

downstream. Experience will testify that 6 to 10 in. of water negative pressure will draw trim into the inlet and keep it taut.

- Next, make a rough flow calculation of the volume that would be induced with that negative pressure and trim tube cross-sectional area to see if there is enough volume/velocity to satisfy the design criterion for trim conveying. The following formulas provide acceptable parameters for trim tube design:
  - For finding the equivalent diameter (D_e) for rectangular pipes, use,

$$D_e = 1.3\times ((a \times b)^5/(a + b)^2)^{1/8}. \tag{7.4}$$

  - The equivalent diameter for the tube dimensions (not the bell opening) given in Figure 7.13 is 2.45 in.
  - Flow (Q) through the entrance plane of the tube can be approximated by:

$$Q = 10.93 \times D_e^2 \times (\Delta P)^{1/2} \tag{7.5}$$

  - where ΔP is in. H_2O and D_e is in. Q is about 167 cfm per tube when the static pressure across the first cross sectional plane of the 6×1 in. rectangular inlet tube is at negative 6 in. H_2O. V, flow stream velocity, is 5104 ft/min under these conditions.
  - The velocity value found by this method is conservative. Therefore, the first step in sizing the blower with the above trim tubes is done. For this trim tube application, 6 in. H_2O ΔP at the entrance plane of the trim tube opening (again, not the plane of the bell mouth) should work well. Equation 7.3 determines the velocity at the entrance plane of the bell mouth, and Equation 7.5 determines flow.

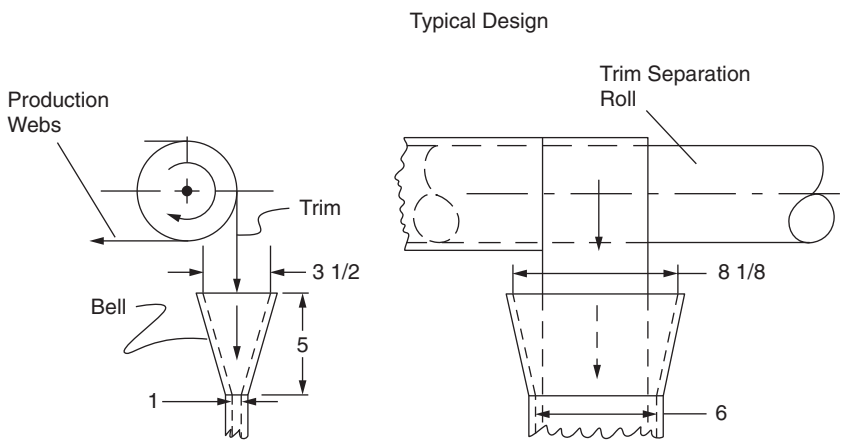

Figure 7.13 Optimum placement for pneumatic trim removal tubes.

Trim tube location is important to provide the most stable takeoff from the machine separation roller. The tube should be designed with a bell-shaped mouth that is located vertically beneath the takeoff point, as shown in Figure 7.13.

The volume of air designed to move through the tube is fixed by the cross-sectional area of the tube and the desired air velocity as shown in Equation 7.3. Optimum air velocity in the tube for trims with specific gravity values of 0.9 to 1.4 and $^1/_2$ to 3 mils thick is 3000 to 5000 ft/min.

Trim tube width may be fixed at $^1/_4$ in. greater than the maximum trim width. A reliable value for the inside dimensions of the rectangular trim tube for good conveying is as follows:

$$\text{Trim tube cross-sectional area} = 1 \times (\text{maximum trim width} + {}^1/_4)\ \text{in.}^2 \qquad (7.6)$$

Air velocity in the tube mouth is critical for easy threading of the trim. Normally, any air velocity in the plane of the bell mouth that is between 600 and 1000 ft/min is a workable value. A reliable value for the area ratio between the bell mouth and the cross-sectional area of the tube is 4.75 when the bell length is 5 in.

Because of noise limitation requirements in most industrial settings, there is a practical limit to the amount of air velocity that can be used in trim-conveying tubes without muffler sleeves. Noise may exceed 90 db in unshielded tubes when flow velocities are > 5000 ft/min and conveying trims are stiff materials > 1 mil thick. Also, noise from the chopper and grinder blades follows the tube inside channel and exits at the bell mouth. This noise can be greatly reduced by installing an "S" bend muffler just downstream of the bell mouth.

The inside tube in the muffler must be perforated on both wide sides to let sufficient sound waves pass through the tube walls and enter the sound-absorbing material to be effective. Polyethylene bags filled with glass fibers work well as sound absorbing material. These bags need only to be packed over the perforated wide sides of the material flow tube.

The solid outer wall of the muffler contains the sound-absorbing bags and redirects the sound waves back into the sound-absorbing material. Figure 7.14 shows a typical "S" bend muffler. A major consideration in rectangular trim tube design is the radius of the bends. In most cases a minimum radius of 2 ft (if possible) is recommended. Smaller radii may be necessary in some cases, but the larger radius reduces wall friction on the moving ribbons.

Trim chopping and shredding

Trim choppers have two or more rotating knives that are set to move very close to one or more stationary (bed) knives. Typically, when the machine is at operating temperature, the rotating blades pass within 0.0005 in. of the first bed knife. These machines usually pass the chopped material directly

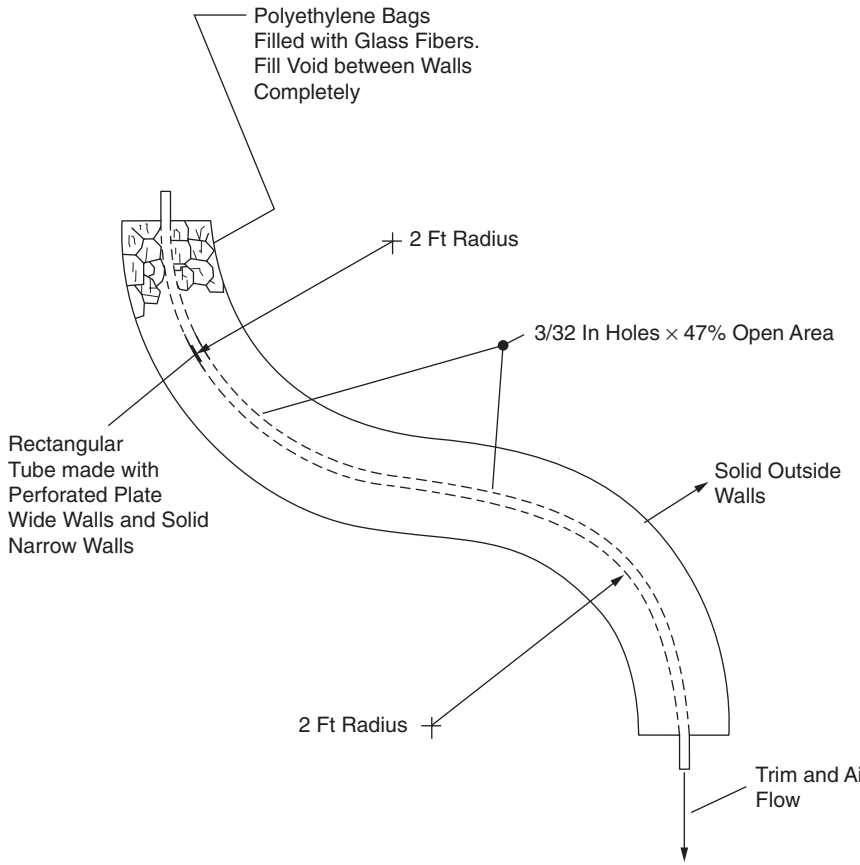

Figure 7.14 Trim tube muffler.

out the bottom or rear of the machine. Machines of this type are known as "free flow" machines and do not significantly impede the flow of material or conveying air through the chopping process.

These machines do not need to be fed with a nip-roll arrangement that may wrap and stop the whole operation, and they usually run trouble free on webs that are > $^1/_2$ mil thick. Thinner trims do not chop well in this type of machine. The blades cannot shear the single trim because the web is thinner than the gap between the blades. Thin ribbons of strong material will often catch on the rotating blades and wrap the blade rotor, producing a severe jerk in the in-feed ribbon, often tearing the ribbon, sometimes outside the tube entrance. Broken trims may or may not rethread themselves in the bell entrance, or a bad cut may result at the slitter and break the machine down.

Trims of tough material thinner than $^1/_2$ mil may be successfully shredded in a rotary tear knife shredder as shown in Figure 7.15. The rotary tear knife shredder pulls the trim ribbon out of the main flow stream with rotating

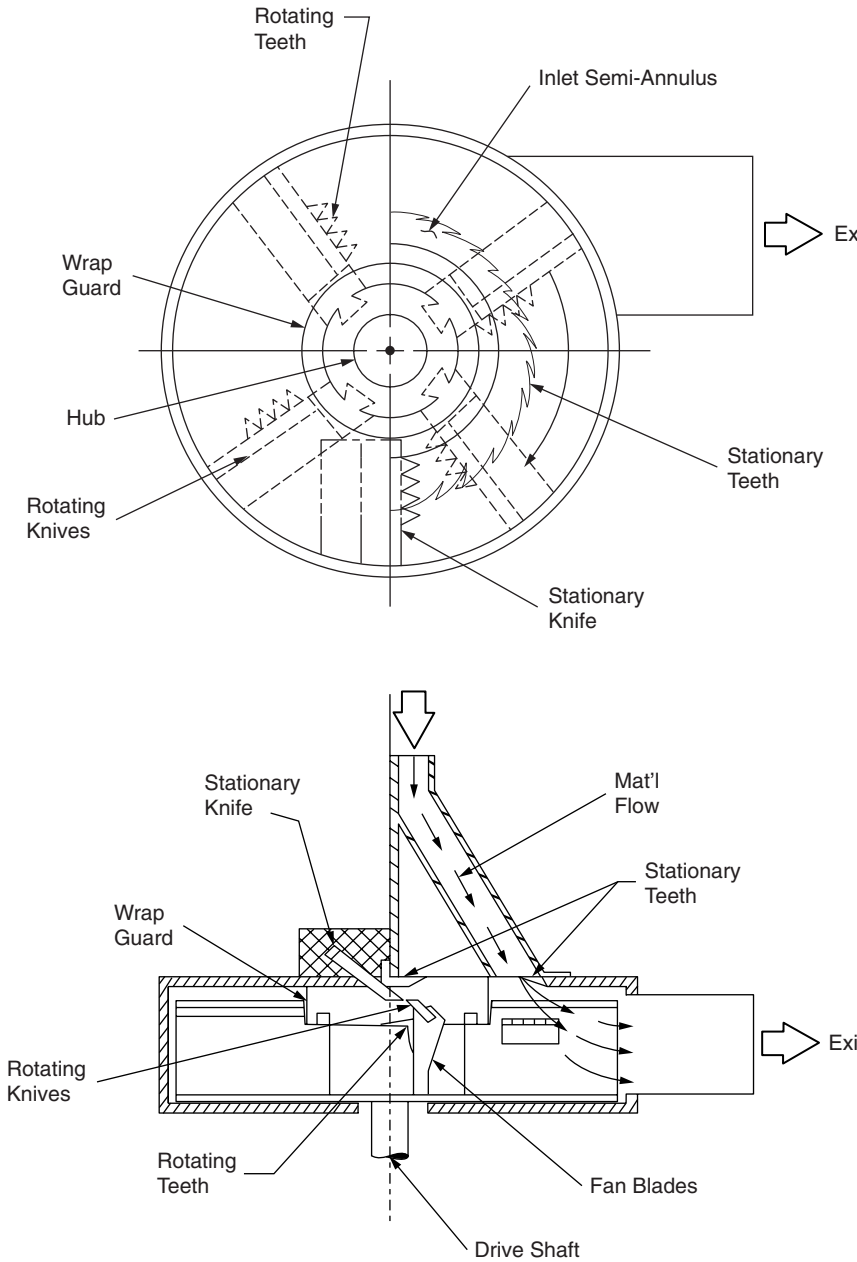

Figure 7.15 Rotary trim shredder.

blades past stationary teeth that pierce the ribbon so it can be torn. The force for tearing is produced by the rotating knives and tear teeth when they pass under the stationary bed knife. The fan blades discharge the shredded material out the exit. Wrap guard cooling is necessary to prevent polymer buildup.

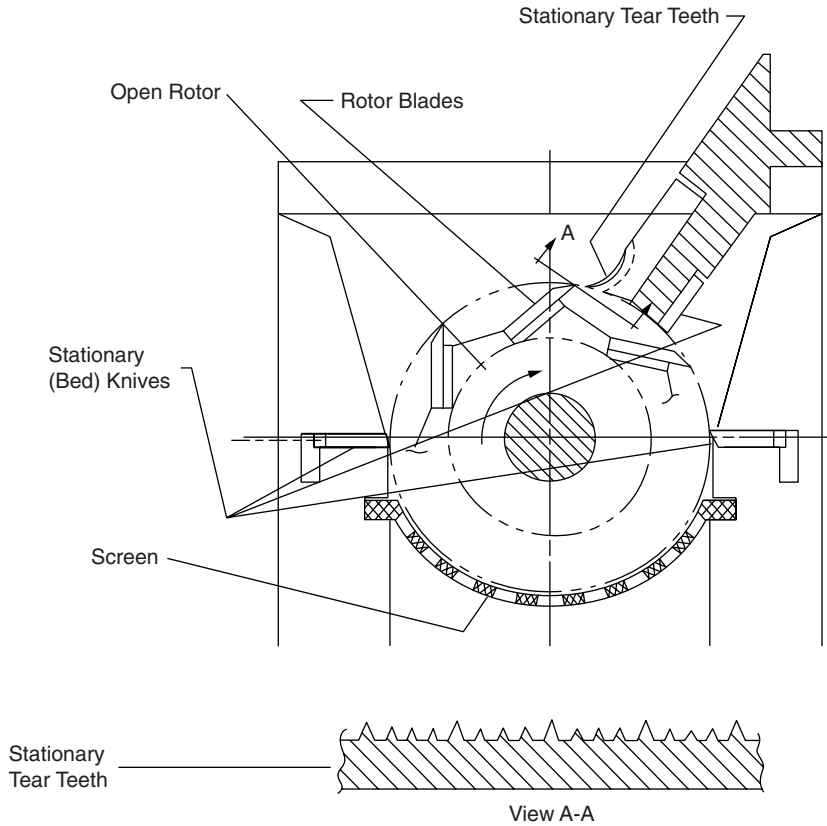

Figure 7.16 Linear web and trim shredder.

A small flow of compressed air to the hub center works well for cooling the internal wrap guard. This machine is also useful in shredding brittle, abrasive trims of all thicknesses. Abrasive trims tend to wear cutter surfaces quickly and can render a standard chopping machine incapable of cutting or shredding the trim. Abrasive trims also wear the cutting surfaces on the machine shown, but the rotating fan blades break the brittle material into small parts. Worn parts must be replaced after abrasive materials have been run through for some time so that the machine can function on thin, tough trim material.

Figure 7.16 shows a trim shredder that uses the same concept for tear knives, but does not separate the trim material from the main airstream in the machine. Also, this machine does not require nip rollers for feeding. Sufficient conveying air will pass directly through the machine to permit pneumatic convergence (if needed) of the waste web material.

This shredder is actually a modified grinder or chipper. Stationary (bed) teeth pierce the trims so that they can be torn into smaller pieces. The force for tearing is generated by the rotating blades moving under the first and

second stationary (bed) knives. Resistance for tearing is provided by the stationary teeth. A third bed knife impedes the circulation of the torn materials that are too large to pass through the exit screen holes. When multiple layers of torn pieces accumulate between the screen and the third bed knife, the rotor knives force them past the third bed knife where they are sheared into smaller pieces.

The screen hole size determines the amount of recycling that occurs in the cutting/shearing chamber of the machine. This type of machine significantly impedes the conveying air when small screen holes are used to reduce the material into very small size pieces. Screen holes with 1 to $1^1/_2$-in. diameters are the optimum size to make particles for conveying and further grinding operations.

This machine can also be built wide enough to shred very wide webs that can be folded or converged into its inlet. A good ratio for maximum web width to shredder entrance width on very wide processes is 2.7:1. Very robust and well suited mechanically for shredding very wide webs folded over 2 to 3 times in the entry funnel, these machines can be built wide enough to be used as the first step in reducing waste material from the exit of wide continuous-casting machines. When the machine is driven with a sufficient size motor (250 hp for a 6-m-wide web is typical), it will also handle fairly large slugs of loose film caused by flow stoppage before the shredder entrance. The discharge from this machine is pneumatically transferred to a grinding machine for further size reduction for storage. The machine's major advantage is the elimination of rotor jerk on the web as it is fed into the machine. Rotor jerk prevents feeding thin webs (web < 1 mil) directly from the casting machine exit to the grinding machine, even when the grinding machine is fed with driven nip rollers.

Automatic trim and bleed trim thread up

Automatic thread up of edge and bleed trims is possible when a pneumatic trim conveying system is installed. A special cutoff knife must be used that severs the trim and allows the leading edge of the severed trim to be pulled into the conveying tube mouth by the ingested airstream. Figure 7.17 shows an automated trim cutoff. The moving mass of the cutoff knife assembly must be small. This is critical for success of this type of cutoff system. Even with small mass, the cutoff knife air cylinder must accumulate pressure in the cylinder before releasing the piston so the knife can reach the velocity required for severing the trim. A very thin knife blade with sharp serrated teeth is used. The knife automatically retracts quickly to prevent any web hangup in case the blade fails to cut cleanly. This system is user friendly in that if the trim does not cut fully the first time, a second try, or as many as necessary, can be made. A hex or square rod should be used to keep the blade oriented during the cylinder stoke. Such cylinders are commercially available. Also, the trim tube and knife must be at least as wide as the trim for complete cutoff.

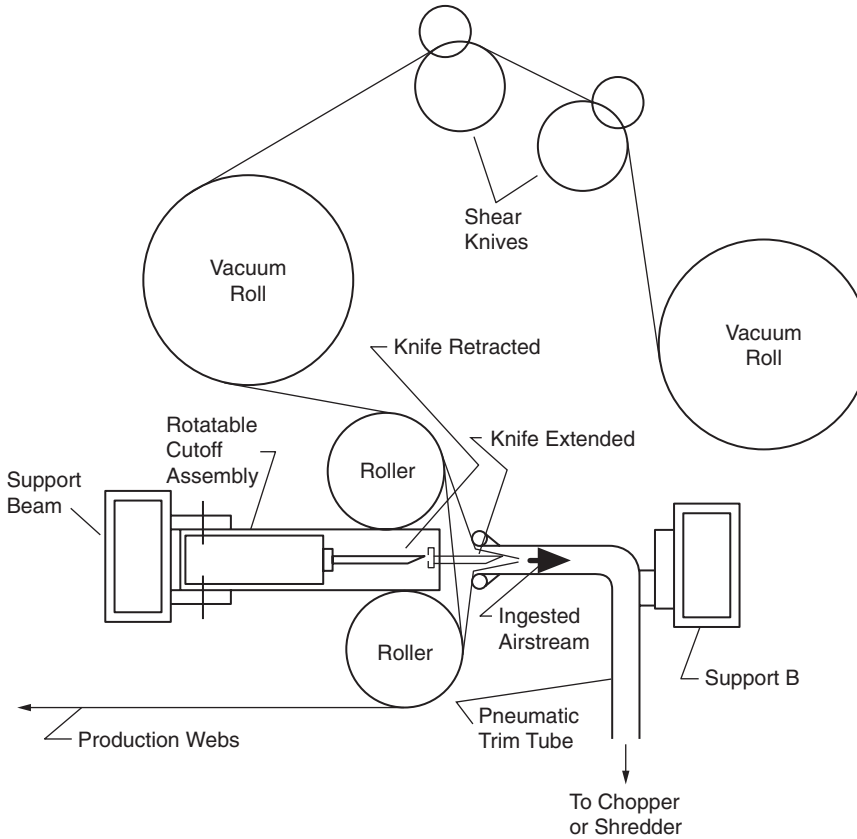

Figure 7.17 Automatic trim thread-up system.

One requirement is that the knife and pickup tube assemblies must move transversely across the machine width in unison on their support beams when production roll width changes are made. This can be achieved mechanically by linking the unit together by chains that traverse the span between the beams on the drive side of the machine; or the separate unit carriages may be driven with servo drives that automatically position the units when the slitter blades are set to the new widths.

The cutoff knife assemblies may be designed to automatically rotate back against the support beam when not in use. Rotating the units out from between the turning rollers will prevent damage to the units in case there are web breakage and roll wraps.

Pneumatic trim disposal system

A typical basic automatic pneumatic trim disposal system consists of the following:

1. Trim–cutoff assemblies
2. Conveying tubes
3. One or two shredders or choppers per machine
4. Shred- or chop-conveying pipe
5. One in-line air separator and bypass arrangement
6. One grinder
7. One grinder bypass air separator
8. One material handling blower
9. One high-capacity air-separator system
10. At least one proper storage facility, and a means to unload it

Figure 7.18 shows a flow chart of the process.

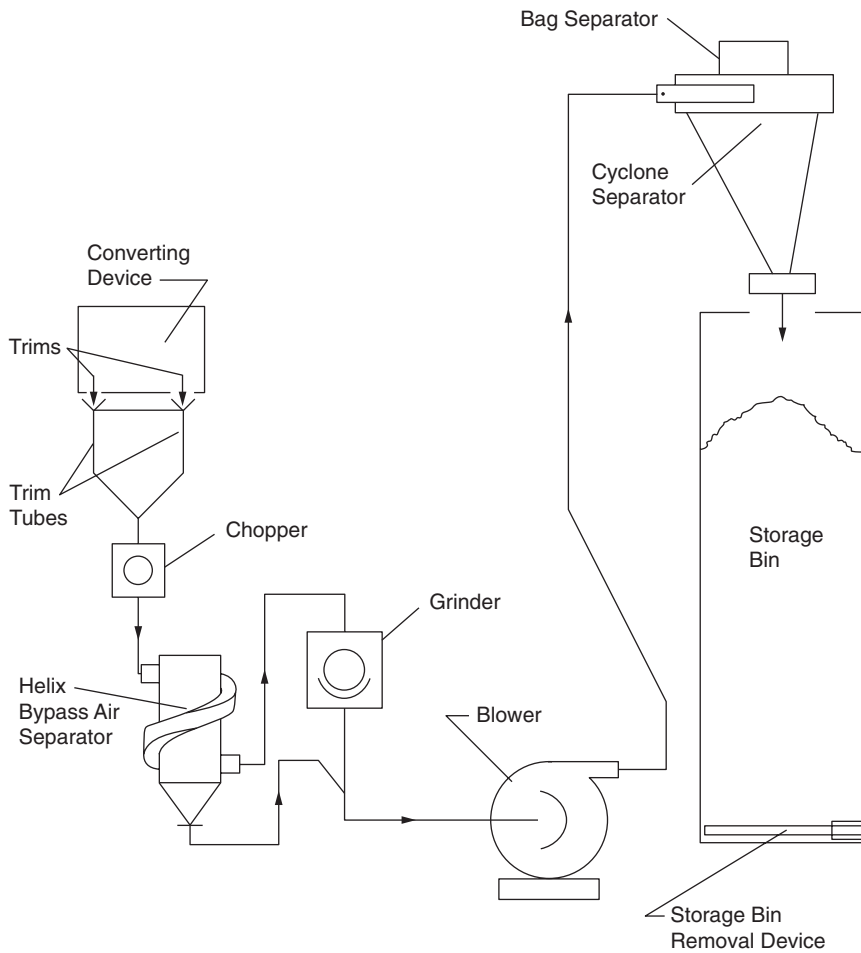

Figure 7.18 Pneumatic trim disposal system.

Automatic cutoff, trim conveying tubes, choppers, and shredders have been discussed above, thus the following descriptions will begin with item 4, shred- and chop-conveying pipes.

Shred- and chop-conveying pipes

Shreds and chops require a minimum conveying air velocity to prevent the solid particles from dropping out of the airstream and collecting on the bottom of the pipe. The minimum average airstream velocity for any pipe cross-section conveying chopped or shredded materials with specific gravities of 0.9 to 1.4 is 5000 ft/min. In special cases the volume of air needed for conveying shredded or chopped material between the chopper and the grinder may be greater than can be ingested through the trim tube openings. Trim tube air volume is calculated from the cross-sectional area of the trim tubes and the required velocity for trim ribbons by using Equations 7.5 and 7.6.

When the shred- or chop-conveying pipe carries material from several converter machines to one grinder, it is called a header. The required volume of air that flows through any one cross-section of the header is, by necessity, at least equal to the sum of all air-stream volumes from contributing trim tubes upstream of that pipe cross-section. When one contributing machine is taken off line and its trim tubes are capped off, an auxiliary inlet (with a filter) must be opened to allow the same amount of makeup air to enter the header pipe to prevent flow interruption.

The makeup air should enter the header at about the same location as the entry point of the machine's chopper discharge pipe. Makeup air may be designed to enter the header through an air-operated vane valve that responds to the increased negative pressure in the trim tubes when they are capped off. A static pressure-sensing switch must be installed on the bell of each trim tube opening. This device provides pressure information for the electrical circuit that controls the actuator on the makeup vane valve. This equipment is necessary because the header pipe must maintain a minimum amount of flow in each section.

Header pipes often have several sections with different diameters. The diameter of the header pipe must be increased as more machines are added to the header. Header diameter is increased to keep the air velocity and static pressure nearly constant in each cross-section of the pipe. Also, there is a need to reduce wall friction and pressure loss through the entire header system.

Calculating pipe diameter for each header section is as follows: determine the total volume of conveying air (sum of all trim inlets) that must flow through the header to the grinder. Determine the inside diameter of header cross-section immediately before the grinder by:

$$D = (1.27 \times (\text{total flow volume}/\text{required velocity}))^{1/2} \qquad (7.7)$$

Use this equation to determine the diameter of each cross-section run of the header. The length of run of each cross-section also is a factor in calculating the correct diameter. However, there is always compromise to be made on how many transitions of diameter are necessary when many machines are discharging to one grinder, because each diameter change can cause flow stream interruption. Smaller diameters have greater pressure drops from wall friction than larger diameters for equal flow velocities, assuming the same wall roughness of the pipe. Also, when the run from the last trim chopper inlet on the header to the blower is long, the diameter of pipe in the long run may have to be increased to reduce the amount of pressure drop due to wall friction. A larger diameter in a long run requires more flow in all upstream cross-sections of the header.

When total flow is increased in the discharge of the header pipe, flow in all of the different diameters between the machines must also be increased. An additional air inlet, other than the trim tube auxiliary openings, must be installed to provide the necessary air makeup. This additional makeup inlet is normally installed at the very beginning of the header before any trim conveying air is introduced. The additional makeup air should be filtered so that it will not introduce contaminants into the waste disposal system. In all waste disposal system design the most economical pneumatic conveying system uses the minimum flow volume at the lowest static pressure differential that will ensure the material flows without problems.

All header bends should be designed with generous radii, 2 to 4 ft where possible. All pipes should be made up of solid wall material. Flex pipe is not suitable for waste material handling because of the high wall friction and leakage in the flex joints. All header pipe and diameter transition pieces should be made with slip joints (all inside edges pointed downstream as in a sanitary sewer) and flanged with sealing material to prevent leakage.

Bypass air separation around grinder

The desired bulk density of ground waste products is often the major consideration in any waste recycle program. Generally, higher bulk density results in more storage capacity for the waste products without requiring more facilities. Also, higher bulk density material is usually easier to transport, remove from bins, and recycle through extrusion machines.

Greater bulk density can be obtained in the grinding machine with proper technique. During the grinding process, the longer the material stays in the grinding chamber the smaller will be the pieces that are forced through the screen. Smaller pieces result in greater bulk density. However, recycling partially sheared material in the cutting chamber reduces the amount of air that will flow through the grinding machine without blinding the grinder screen. Bypassing some of the conveying air around the grinder is sometimes necessary to have sufficient conveying air for the upstream chop and trim transport systems. One concept for separation uses a helix bypass air separator. Figure 7.18 shows a helix bypass air separator before the grinder. Figure 7.19 is a detailed view.

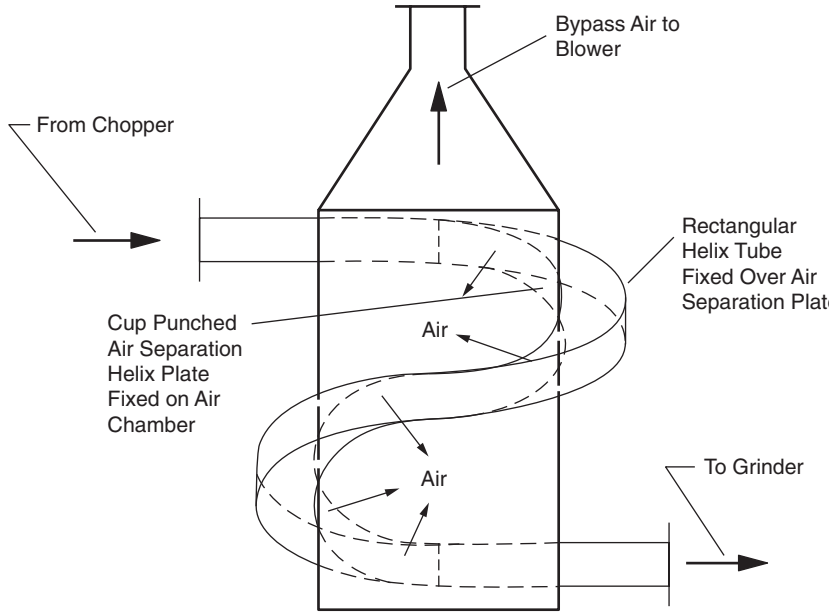

Figure 7.19 Helicoidal air-separation system.

The helix bypass air separator uses centrifugal force to help separate the waste material from the conveying air during operation. A cup-punched air-separation plate allows the higher static pressure in the rectangular helix tube to push conveying air through punches into the air evacuation chamber, where it flows downstream and joins the grinder discharge pipe before the blower. More than one complete helix may be used if more bypass air volume is needed, or any portion of the helix may be used if less bypass volume of air separation is needed.

A flow control gate valve is necessary on the bypass outlet to regulate the flow through the grinder. The air separation plate is fastened to the air chamber over stitched (or intermittent) helix slots that are cut into the chamber and fixed in place with screws or other suitable means. The slot must be at least as wide as the punch pattern on the separation plate.

The air chamber wall material between the slots should be designed for the punch pattern and spaced such that it covers a minimum of punches in the separation plate. The rectangular helix material conveying tube is mounted over the air-separation plate. It has outboard flanges that are fixed to the air separation plate with screws or other suitable means. Sealing material is placed between the flange and plate surfaces to prevent leakage. Figure 7.20 shows details of the punches in the air-separation plate.

The plate is punched with a cup-shaped punch that produces a non-snagging surface to the material flowing past. Static pressure in the rectangular helix conveying tube pushes some of the conveying air through the punches into the air chamber. The punches can be made in any pattern as

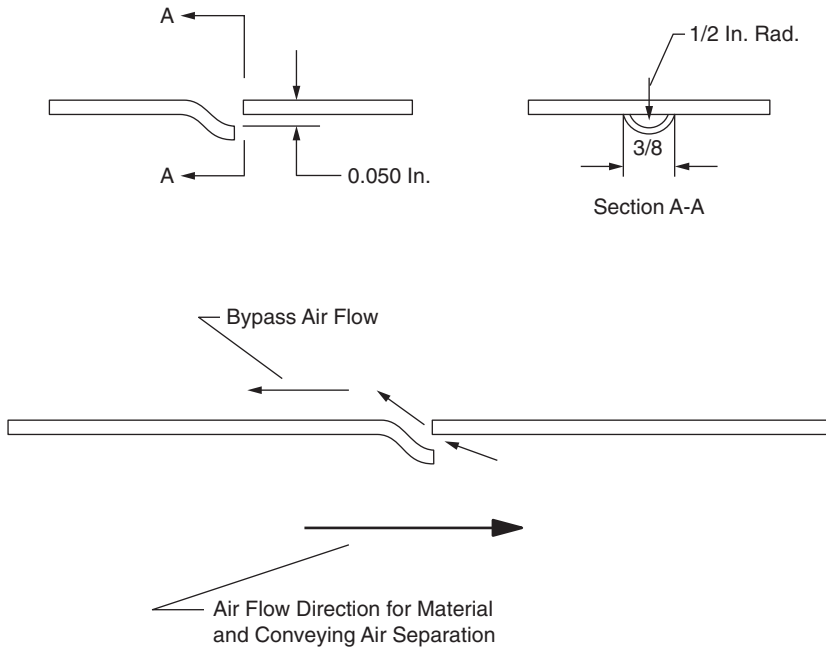

Figure 7.20 Air-separation plate punches for helicoidal air separator.

long as they are oriented with the flow as shown in Figure 7.20. A 2 × 2-in. punch offset pattern is typical.

Flow through one punch is calculated to be about 0.2 cfm when there is a 2-in. water pressure differential across the plate. The number of punches needed is calculated by dividing the desired cfm of bypass air by the static pressure differential across the air-separation plate. The amount of bypass air needed is dependent on the flow capacity through the grinder. Normally, when a waste conveying system is operating with a mix of solids and air in the helix tube, there will be less static pressure differential across the air-separation plate than when there are no solid materials in the tube.

Functions of the grinder

Grinder screen hole size is the most significant variable in determining the size of the particles that pass through to the blower. Grinder knife setting clearance is the next most important variable. Generally, grinder knives are cold set with more clearance than at which they operate, when the temperature increases in the cutting chamber and reduces clearance between the blades.

These machines are not designed to shear single pieces of waste product as is done in the choppers. Shearing occurs between the grinder bed knives and rotating knives when multiple pieces of waste are bunched together so they are thicker than the clearance between the knives. Greater

knife clearance allows more recycle in the cutting chamber with the same diameter screen holes. For example, if a certain bulk density is obtained with $^1/_4$-in. diameter screen holes and blade clearance at 0.004 in., the bulk density will be increased by opening the blade clearance to 0.006 in. There are numerous grinding machines with various numbers of rotating knives and fixed bed knives. Selecting the proper screen hole size and knife clearance to achieve the desired bulk density is usually accomplished by testing the machine on products at the vendor's test laboratory. Sometimes the size (screen area) of the grinder must be determined by calculating the amount of air that must flow through the machine and the amount of waste material it is grinding. While the amount of conveying air should be minimized to minimize power usage, sufficient volume must be available to transport trims and chops from all other converting machines that are feeding into the grinder.

Sizing the blower

After calculating the diameters of the header sections to find the total flow volume, determine the amount of pressure the blower will be working against on the exhaust side. This is the final step in determining the static pressure capacity of the blower. When a new trim system is added to an existing air-separation/bin-storage operation, there is a certain level of static pressure against which the new blower must work. Selecting a reasonable size blower that has the required capacity is done by first figuring the pressure drop in the length of run from the blower to the air separator. Do not forget to figure the number of required elbows, because they add length to the run for pressure-drop calculations. Calculate the pressure drop in this run for the total flow volume and add it to the back-pressure on the blower from the air-separation equipment. The total amount of pressure that the blower must develop is the sum of that and the absolute amount of negative pressure required to get the shreds or chops to the blower. Pipe elbows in the run from the blower to the cyclone separator should have 2- to 4-ft radii if possible.

Fundamentals of the cyclone separator

The cyclone air separator is an old device for separating solids and air, and is analogous to the steel wheel for trains. It is hard to improve on what it does best. Waste solids are separated from the carrier air by centrifugal force as the mix of air and solids are swirled into a vortex funnel by the shape of the device and the entry angle of the incoming airstream(s). The separated air rises to the top and the solids fall to the bottom where they are metered through a bottom star valve or similar pressure-seal device.

From the metering valve the ground material feeds by gravity to the storage bin directly below. Sometimes the bin and the cyclone separator are at a positive pressure with respect to the atmosphere from the blower(s) that

are feeding material into it. In either case the action of the waste material is the same, but no metering valve is needed when both units are pressurized. The rising air passes through bag filters and is exhausted to the atmosphere. Bag filters are used because they have a very large surface area for air separation and they can be kept clean longer than box-like filters. The bags are kept clean by back-flushing the bags with air pulses from high-pressure plant air at regular intervals. Eventually, significant buildup in the bags' pores will require bag replacement. Usually the static pressure in the bin, or the cyclone unit if the bin is not pressurized, is monitored. High bin or separator pressure indicates that the bags need to be replaced. The required size of the cyclone unit depends on the total volume of air and solids that must be separated.

Low-bulk-density material is difficult to separate from the conveying airstream. The upward velocity of the separated air must be kept to a minimum to prevent the low-weight material from rising with this flow and fouling the bag filters. The more air that is forced into the bin, the greater the problem with waste rising with the escaping air and fouling the bag filters. More helix air separators may be used on the blower discharge pipe to reduce total air volume to the separator and bin. Figure 7.21 shows one concept for doing this. Discharge air from the helix separator should be filtered before exhausting to the atmosphere because fines may have escaped through the punched plate of the helix separator into the discharge air.

Storage bins

Low bulk density material is often difficult to remove from the storage bin because of bridging in the bin. Bridging occurs when the weight of the ground material settles in the bin and forms pressure on the sides of the bin. This side pressure compresses the ground material. When there is sufficient side pressure, the small pieces of the ground material will start to interlock and form a bridge across the bin diameter. This is especially true for flake-like materials. Frequently, the friction from the side pressure is great enough to prevent any downward movement of the material in the top of the bin as material is removed from the bottom of the bin. Even very wide bins, up to 20 ft or more, will bridge when enough material is placed on top. The most common practice for unloading a bin that has been bridged is to use a long rod and try to break the bridge from either the bottom or the top. Bridge-breaking is a difficult and never-ending job in some processes. Often the bridge will remain even when rod holes have been punched through from top to bottom. Bins have been proposed that have wider-bottom-than-top diameters to negate this phenomenon. However, a cone angle large enough to prevent bridging of some materials would severely limit the storage capacity of the bin. Some bins are equipped with bladders that expand to reduce the inside diameter and then contract to suddenly increase diameter. This type of action is successful on many products. Vibrators attached to the bin walls are only partially successful. Bins with vertical screws to help

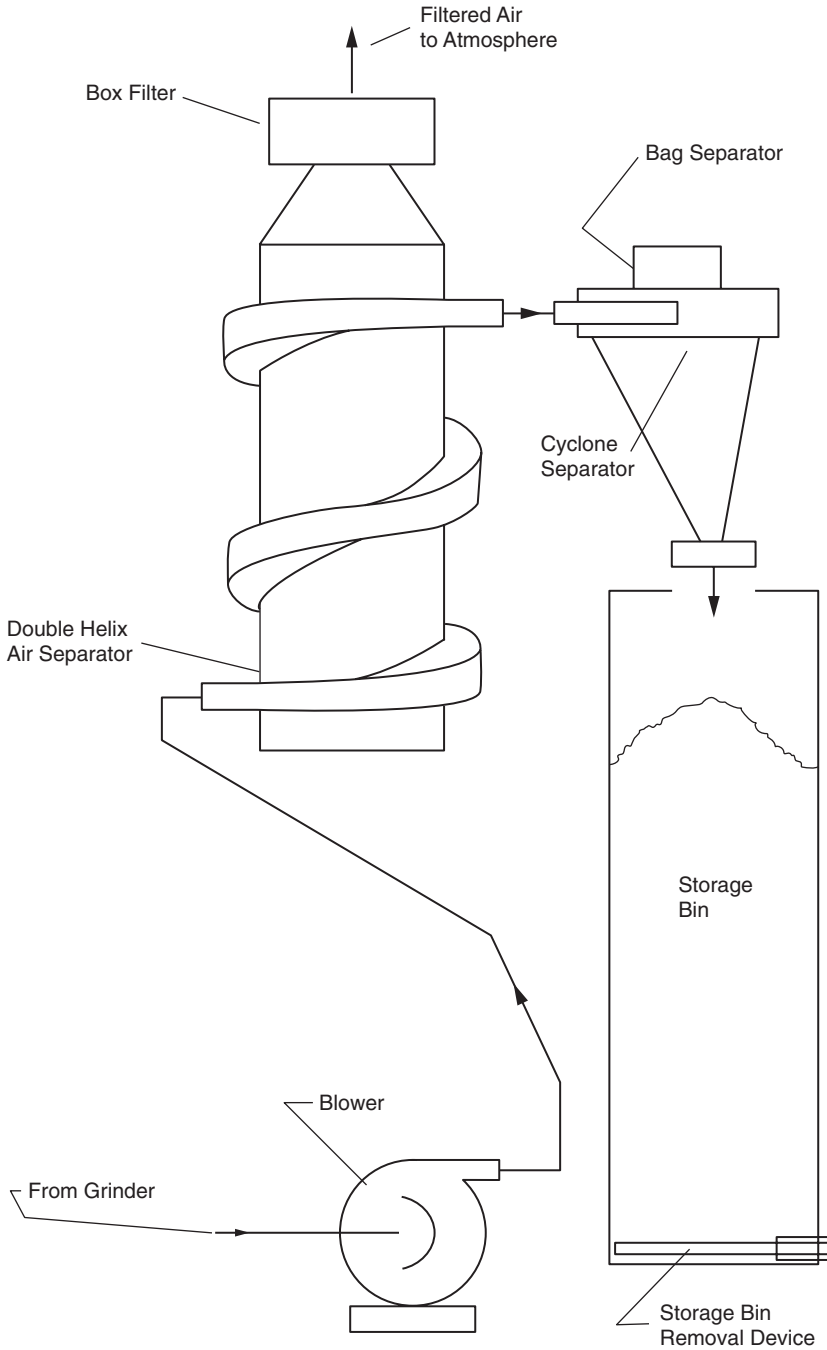

Figure 7.21 Supplemental air separation for pneumatic trim-removal system.

negate the bridging problem seem to be fairly successful with low-bulk-density material.

Because this is an old problem, many concepts for getting low-weight material to flow downward in the storage bin have been generated. Some work fairly well on low-weight ground material, so full-scale testing should be done with a product at the vendor's laboratory before installing storage bins.

One way to avoid the problems of removing low-weight material from storage bins is to greatly increase the bulk density by making pellets from the material as it comes from the grinder. A commercial pellet machine may be less expensive in the long term than storing low-bulk-density flake in bins because of the difficulties with transport and storage.

chapter eight

Winding technology

Impressive slit-roll quality, day after day, is the best tool that a converter sales representative can have in his/her portfolio to compete in today's marketplace. Every product has special characteristics that require unique winding needs. This chapter highlights some of the fundamentals in the winding process.

Affects of gage/caliper variation

Gage or caliper variation is probably responsible for most of the poor roll quality in today's slit rolls, especially in thin plastic webs wound into large diameter rolls. Sometimes the increased diameter difference at the gage band stretches the web beyond its elastic limit as the roll is being wound. When the roll is unwound, stretch lanes in the single sheet create defects during further processing of the product. Figure 8.1 shows the effect of a single gage band on the web that is unwinding.

The maximum amount of gage thickness increase in a gage band permissible without causing permanent stretch in the web may be calculated by Equation 8.1, when the stress/strain modulus is known. Practically all boundary air between the wraps is removed for this calculation.

$$\% \text{ Gage}_{\text{Max. Thickness}} = (100 \times D_F \times S_Y)/(M \times (D_F - D_C)) \tag{8.1}$$

where

$D_F =$ roll OD,
$S_Y =$ yield stress point for the web material,
$M =$ stress/strain modulus,
$D_C =$ OD of the core.

Equation 8.1 shows the maximum percentage that the web thickness can be increased in the form of a band in a roll without permanent damage to the product. It also shows that the amount of thickness increase that can be tolerated depends on the finished roll diameter and the core size, or in other

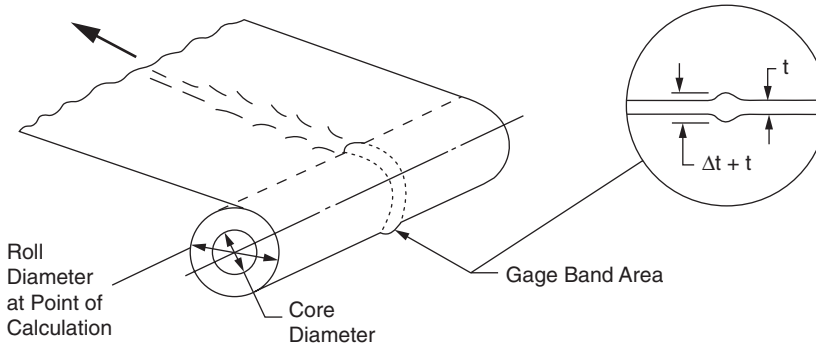

Figure 8.1 Effect of single gage band in wound roll.

words, the number of wraps in the roll. For example, a 1-mil PET web is wound in a vacuum chamber to 16 in. diameter on an 8-in. OD core. S_Y for PET film = 15,000 psi, M = 500,000 psi. The maximum variation between the nominal web thickness and the gage band thickness that can be tolerated without permanently deforming the web is about 6.0%.

The tension level in the gage band area as the roll is being wound can be calculated from:

$$T = ((M \times \Delta t \times (D_F - D_C))/(2 \times R) \tag{8.2}$$

where

T = web tension in web in the gage band,
Δt = web thickness in the gage band,
R = nominal roll radius at the point of calculation.

The other variables are the same as in Equation 8.1.

For the example given above, T = 15 PLI. Thus, Equation 8.2 is a check on Equation 8.1. Yield tension for a 1-mil web was given at 15,000 psi or 15 PLI for 1-mil film.

However, operating near 15 PLI is far too much tension to apply to 1-mil PET film for general processing. As discussed in Chapter 1, normal web tension for PET film is about 1 lb/mil/linear inch or 6.67% of the yield stress limit.

Gage bands are a major problem when lay-on or rider rollers are used to exclude boundary air from between the wraps in the roll. As the bands increase in diameter, they become the major support areas for the lay-on roller. The areas between the bands entrap excessive boundary air when the lay-on roller can no longer nip effectively.

Three general kinds of defects may occur in a roll that has excessive gage variation: TD wrinkles may appear between the gage bands; MD wrinkles may appear between the gage bands; and short length diagonal wrinkles may appear between the gage bands. Entrapped air is a major variable in all three types of defects.

The increasing differential diameter at the gage bands promotes the entrapment of an increasing amount of boundary air between the roll wraps as the roll's diameter increases. The entrapped air takes up significant space within the roll as each wrap is laid down. After the wrap is laid down, the entrapped air begins to slowly bleed to the atmosphere at the roll ends via the web-surface asperity. (Sometimes, because the web is coated with an adhesive or like material, pockets of entrapped air do not bleed to the atmosphere as quickly as other areas in the roll. When this happens, bubbles of entrapped air stay in place and may even grow as more entrapped air is forced into the bubble by the compressive pressure as the roll builds.) The entrapped air is forced out of the roll because the air is under constant pressure from elastic compression of the roll wraps above. As the entrapped air bleeds away, wraps that were held apart by static air pressure move into the voids and closer to the core.

Usually, there is more wrap material than there is space because the wrap moved from a greater diameter to a smaller diameter in this process. When the pocket vacated by the entrapped air is small, the defects appearing in the wraps will be small. These small defects may take any orientation but usually wind up as small diagonal wrinkles that appear in the winding roll throughout the rest of the buildup. When the amount of entrapped boundary air is excessive between the gage bands, the web will fail as a compressed column in the MD. These winding defects will manifest themselves as TD defects between the gage bands and are commonly called TD wrinkles.

Sometimes the wrap structure between gage bands fails like a column in the width direction between the gage bands while it is still under tangential tension from the initial elongation that occurred when it was laid down on the roll. These defects will manifest themselves as MD defects, and are commonly called MD wrinkles.

Higher tangential tension at the gage bands tends to lock the web material in place and no lateral movement and no folding occurs in the band area. There is also less boundary air entrapment between the wraps in the gage band areas because the higher tangential tension during the winding process has forced most of the boundary air between the wraps to areas of lesser pressure between the gage bands. This is what seems to happen when MD wrinkles appear when gap winding is being used. MD wrinkles usually do not appear unless a rider/lay-on roller is used. There is more discussion about this later in this chapter.

Gage band randomization

One of the techniques to improve roll formation when there is significant gage variation in the web is to oscillate the bands while the roll is winding. This technique spreads the thicker web material over a wider area and reduces the amount of buildup in the gage band area. The first and best place that this technique should be used on films is on the casting machine windups. Once a defect has been wound into a roll, it will remain in the web

unless or until the web has been reheated beyond the TG point in a constrained configuration.

Windup oscillation on casting machines

Windup oscillation is a coordinated application between lateral movement of the slitters and winders. The first part of the concept is to slowly oscillate all slitters at the same time and at a constant speed through a period cycle so the slit width of each web remains the same, but the standing gage bands are relocated relative to the web edges with time. The second part of the concept is to move the windups laterally, so the roll edges remain at the web edge position as it oscillates back and forth. Figure 8.2 illustrates this concept.

There is a time delay from when the slitter is cutting the web edge in lateral position X and the winder should be in lateral position X. This time difference is dependent on the speed of the web and the distance from the

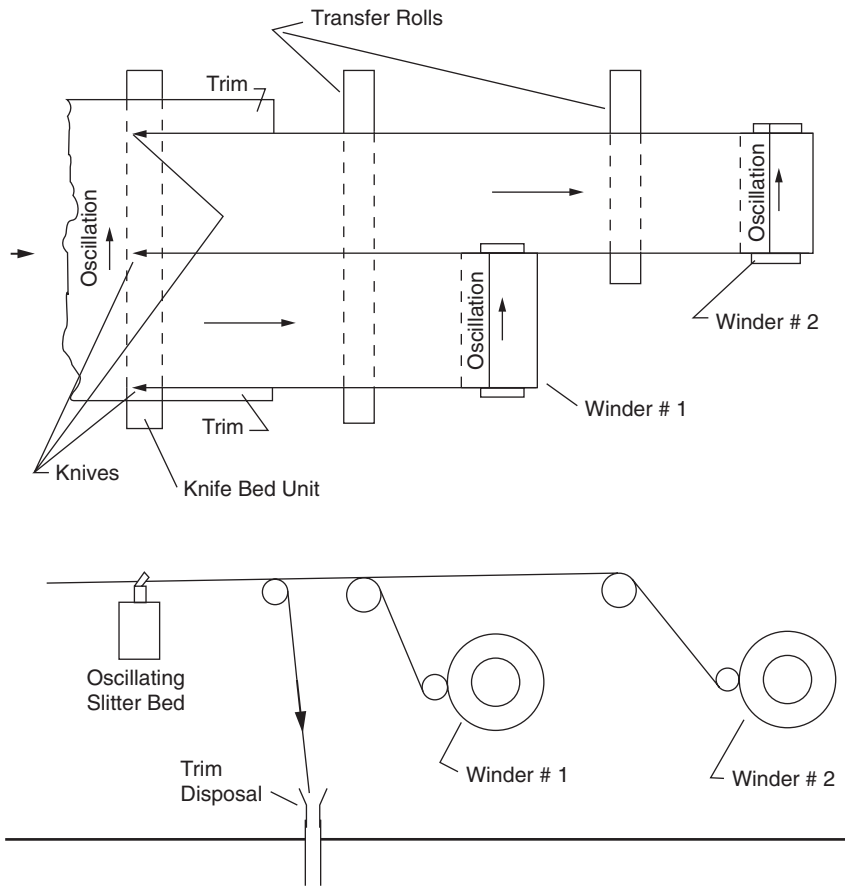

Figure 8.2 Windup oscillation concepts.

slitters to the winders. Sometimes the winders are ganged so there are differences in distances to the different windups. When this happens, the winders have different lateral positions with respect to the machine during the winding cycle.

At startup, the slitter knives always start first. Winder oscillation movement is delayed until the web edge begins to move laterally at that winder's lateral position. The oscillation speed of the knives and winders must remain exactly the same during the oscillation period. When the speed is different between the knives and the winder, there will be a saw-toothed edge on the roll. When the timing between the edge position and roll position is not synchronized exactly and the speeds are identical, there will be a flat offset at the end of each period in the oscillation cycle. Figure 8.3 shows the two kinds of roll edges.

Particular attention must be paid to acceleration and deceleration times of all pieces of equipment at the end of each oscillation period. Because the masses of each piece of moving equipment are different, the acceleration and deceleration times will be different, even though the actual lateral speed is slow. Also, the slack in the linkage from the drive to the piece of equipment is different for each unit. The unit with the most drive-train slack must be started and stopped ahead of time to synchronize the actual unit lateral movement start and stop with the edge change-of-direction. The easiest way to set up unit start-and-stop timing is to put a short rest period at the end of each period of the slitter knives. The winders can be stopped, rest for a brief period, and then started in sync with the movement of the web edge. Movement of the knives should be made the independent variable in the system control scheme. A lateral speed of $1^1/_2$ in./min works well for oscillation speed on webs $^1/_2$ to 350 microns thick. The $1^1/_2$ in./min lateral oscillation speed is also acceptable for line speeds of 50 to 1100 ft/min.

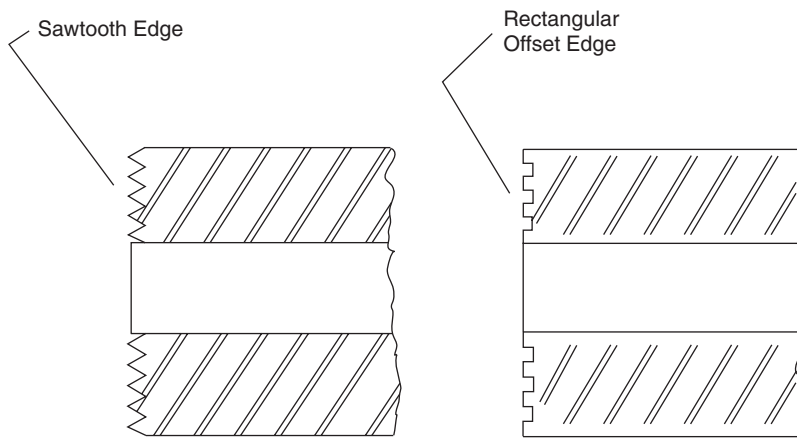

Figure 8.3 Possible wound-roll edge cross-sections with windup oscillation.

There is a lateral deviation of the incoming web on films that are stiff enough to exert a shifting or sideways force on the incoming web during lateral travel of the windup unit. The side shift usually results in an objectionable sawtoothed edge on the roll. It is very difficult to adjust the start/stop timing on the windup unit to compensate the web shift on each stroke because of tracking-friction changes on the transport roller. The amount of shift changes over time. One concept to counter this lateral shifting force is to install a vacuum roller as the last web transport roller (this roller does not oscillate) as close as possible before the windup unit and operate with a small amount of overspeed (about .5%) on the vacuum roller. The vacuum roller may have to be articulated into place on turret type windups to get the vacuum close to the winding roll.

The active width of the vacuum chamber in the vacuum roller should always stay covered as the web edges move laterally during their oscillation cycle. Because the amount of oscillation travel is small compared to the normal roll widths made on casting machines, there should be sufficient tension isolation on the vacuum roller to hold the web in MD alignment with the casting machine. Figure 8.4 shows how a vacuum roller may be used in this manner. The web edges may be monitored with edge guides to give information to the control PC. However, they should not be used as sensors for the windup units because of the drive-linkage slack take-up in stopping and reversing directions and because an edge monitor is not able to anticipate the exact time to start and stop the windup drive system. This time interval must be determined experimentally. The most stable oscillation system is one that uses a synchronous drive and an encoder on the oscillating knife bed, and a servo drive and an encoder on each windup. These drives are programmed in the PC for the required calculated time delays for distance variation relative to line speed and the amount of differential start- and stop-times for each windup unit when stopping, reversing, and restarting.

The optimum period for windup oscillation is $^3/_4$ the distance between the peaks of the most prominent gage bands. However, sometimes the oscillation period must be reduced to accommodate different chart widths on the machine, because there is not enough usable width in the cast web for the optimum oscillation period and slit-roll widths. Sometimes an economical or business decision is made that allows less-than-optimum oscillation periods. This is quite acceptable, because some windup oscillation is better than no oscillation in any winding situation. However, the optimum oscillation period always should be sought.

Unwind oscillation on converting machines

Most slitters are equipped to oscillate the unwind stand during the slitting operation. In most cases, only small reductions in buildup at the gage bands can be achieved by oscillating the unwind stand. Usually, there is a limit on the amount of trim that can be removed from the supply roll and the amount

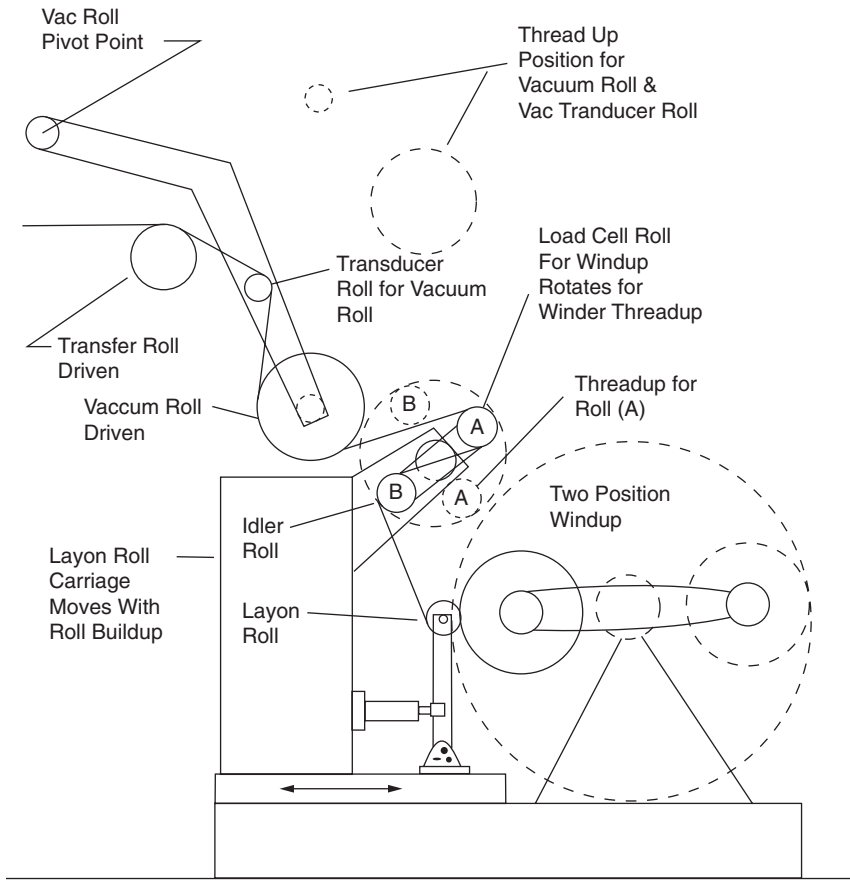

Figure 8.4 Tension isolation before windup via vacuum roller.

of lateral movement cannot approach the required period for optimum oscillation travel. Sometimes, when the stand is shifted laterally during operation, there is a tendency for the web to wrinkle on the first few rollers of the slitter, because the lateral movement of the stand is not slow enough to allow the full width of the web to track sideways on the rollers that are not moving laterally. Also, if the unwind stand is following an edge-sensing device for position control, there is a tendency to create wrinkles during start/stop intervals in the lateral travel. The lateral speed during unwind oscillation should be smooth and slow. Rapid speed and movement interruptions are likely to cause web wrinkles.

Any method that will reduce differential radius buildup on the winding roll will help improve the slit-roll quality. There is only a very low probability that oscillating the slitter unwind stand will realign the gage bands that were randomized in the supply roll on the casting machine, because of the random starting position of the web in the slitter relative

to the position it was in when it was doffed from the casting machine. Also, it would be an unusual coincidence if the periods of the two machines' oscillation were the same.

Cores and mandrels

Eccentricity of the core or mandrel is an important variable in the web-winding process. Core and/or mandrel run-out, another term for eccentricity, is an important variable that impacts the amount of boundary air that may be ingested between the roll wraps during high-speed winding. As discussed in Chapter 3, excessive run-out is also detrimental to web control in the first few rollers of a converter machine during the unwinding process. The requirements for core or mandrel eccentricity are stricter for winding than unwinding, because defects are built into the web product as the roll is wound, not when it is unwound. Generally, core or mandrel run-out should be kept below 0.010 in. for best results during the winding process.

Cores

Core out-of-roundness is often blamed for poor run-out during the winding process. Usually, the core is not causing the problem unless it is not properly cut and/or cannot be properly chucked in the winder. Most helix wound paper cores with wall thickness > 1/4 in. that have not been degraded in some way will have run-out < 0.010 in. for widths up to 80 in. when they are new and dry. Exposure to moisture is the bane of paper cores, because they warp and bend as the moisture causes uneven growth in the paper. Paper cores should be stored in humidity-controlled areas of the plant and never be exposed to outside weather unless they are in a completely enclosed, moisture-proof container.

There are many choices involving paper core purchases. Cost is very important, but should be relative to the value of the product being wound. Loss of a few rolls of valuable product is equivalent to the value of many valuable cores.

Perhaps the most common error in selecting the right paper core is in using too-thin wall thickness. Thin walls have less resistance to compression pressure and will shrink substantially before crushing. Core shrinkage, while winding, may create wrinkle problems within the winding roll. Sometimes wraps have excess length as they are forced into less space by the compression forces of the wraps above. The wraps fail in compression (that is, they buckle) in the TD as their support radius shrinks. All cores will shrink with winding compression pressure. The stronger the core is in compression, the easier it is to wind thin, extensible webs into good-quality large rolls. Substantially more wraps may be applied to the winding roll without risk of crushing the core. When selecting paper cores, it is much better to err on the strong rather than the weak side, even though the cost of each core is higher.

Resin-coated paper resists moisture and provides a smooth surface for winding valuable webs. Core impressions from the helix construction wraps in plain paper cores sometimes cause defects that extend many wraps into the roll. Resin-coated surface cores are a good solution to this problem. Resin-coated paper cores provide a smoother and harder surface than plain paper. They also resist moisture better than plain paper, and there is usually less core contamination from the resin-coated cores. However, the storage requirements are the same as for the plain paper cores for preventing moisture degradation.

Extruded plastic cores that are machined are excellent for run-out and are not subject to moisture degradation. Properly machined cores are smooth and do not leave impressions in smooth, thin film wraps. However, plastic cores do change shape under compression stress and should not be reused over and over because they eventually become eccentric, or out-of-round. They hold up well during storage and shipping, especially on ocean-going vessels. These types of cores should be considered when high-value products are involved in the core-buying decision.

Metal cores are sometimes used on high-value products because they can be made very precise in the machine shop. However, metal cores can be easily degraded and must be protected from being scratched and "dinged" when they are to be used many times. Most scratches occur when wraps are removed from stub rolls (rolls not completely unwound), if they are cut off manually. Knife marks should be removed before scratched metal cores are reused. Some plants solve the stub-roll cutoff problem by unwinding several stub rolls at the same time with powered nip rollers and feeding the waste webs into a film shredder or grinder. The stub rolls are mounted and secured in racks that allow the cores of the stub rolls to turn freely on cam followers or other bearings as they are unwinding. Most "dings" occur when the cores are dropped or tossed into racks and piles of other cores. Also, long metal cores are sometimes bent when large rolls are supported in "beam racks" and shipped by truck from producer to customer. Core straightness should be checked on all returned cores that have been so used.

Management of metal cores can be a major problem for any plant because of the labor required to keep the cores smooth and straight for winding at high speed. Also, metal cores are expensive and must be reused to justify their use. This usually means that the supplier must discount price to pay for metal core handling and return freight. Plus, it is difficult to keep track of the many cores in a large operation where there are many different sizes and lengths. Metal cores should not be considered unless their use is fully justified.

Glass or graphite fibers are good materials for cores because of their high strength-to-weight ratio. Low deflection from weight is a desirable objective in core structure, especially on very long cores such as those found on the mill winders on casting machines that are up to 33 ft long. These types of materials are expensive and care must be taken when using them in an industrial environment.

Mandrels

Air-bladder mandrels are widely used in production and converting industries because they provide a way to quickly mount and secure cores for winding and unwinding. Although they are relatively light in weight and can be manually transported about the area, they are a robust piece of equipment. However, air-bladder mandrels introduce a significant amount of detrimental eccentricity, or run-out, on the winding core.

Run-out is probably the most significant problem that winder operators encounter with bladder mandrels. The basic problem is that the bladder does not expand uniformly when it is inflated inside the core. Often, the mandrel dressing procedure adds eccentricity. Sometimes the mandrels are inflated while resting on the plant floor or on a table. In this case, the weight of the mandrel causes nonuniform bladder expansion. Sometimes two bladder units are mounted on the mandrel shaft for supporting the winding core. One end may be inflated before the other when the unit is resting on the floor. This often adds to the eccentricity of the core because the inflated bladder is not axially aligned when it was inflated. When the second bladder inflates, stresses are applied to the second bladder by the first bladder as it attempts to maintain its nonaxial mandrel shaft position. Thus, the second bladder does not inflate in the same fashion as the first, and additional eccentricity is introduced.

Many schemes have been employed to reduce core eccentricity while using bladder mandrels. Perhaps the easiest one to implement is to always support the mandrel with a hoist or other device while the bladder is inflated. Some operators plumb the air inflation tubing of two bladders together so that they inflate together from one port. Another concept uses stationary rings that are fixed to the mandrel shaft. The OD of these rings is just a little bit smaller than the ID of the core. The objective is to almost center the core on the mandrel shaft before the mandrel is inflated. But this concept can result in major stuck core problems if the core is compressed very much from compressive forces of winding. Some commercial mandrels first inflate bars or rods in the mandrel shaft to more accurately position the core before inflating the main bladders that provide the friction for driving the core.

The least amount of run-out is experienced when using mechanical expanding shaves. The expanding elements may be metal bars or rods that are driven radially outward by cam action from screws or pneumatic types of actuators. One concept has serpentine expanding elements with high-friction surfaces that are moved by cam action and driven by a screw that is turned at the mandrel end. Most of these mandrels will center the core to within 0.010 in. run-out. The biggest objection to mechanical expanding mandrels is the weight. And they are not as versatile as the bladder mandrels. For example, the same mandrel shaft may be used on 3-, 6-, and 10-in. cores with only minor changes in the equipment. Mechanical mandrels usually are made for one diameter core ID.

Rigidity and vibration

Demand for higher film-processing speeds to improve productivity on converter machines strains the limits of winding technology, and there is a continual customer desire for larger diameter supply rolls. Larger diameter, more footage per roll, adds a higher degree of difficulty during the production of high-quality rolls. Higher speed and/or larger diameter rolls require more precise winding equipment and improved winding technology.

One machine limitation to operating at higher speed is the rigidity of all the supporting structure in the converting machine windups, especially when the winding speed is increased beyond 2000 ft/min. All basic structures must be very stiff to resist resonating vibration at these high speeds. The natural resonance frequency of all machine parts must be well above or well below the excitation frequency in the full range of operating speed. The subassembly groups must all be designed to have natural frequencies well above the highest excitation frequency that will be experienced at the top operating speed. Examples of these groups are: the lay-on rollers, cantilevered supports for the lay-on rollers, chucks, cantilevered support arms for the rolls, and windup drive-train parts. Also, the machine frame and its subassemblies must be stable at all operating speeds of the above parts.

All mechanical parts of any machine structure have a natural frequency of vibration while that machine is operating. These parts may be moving, such as rotating rollers, shaves, belts, and gears; or they may be stationary, such as dead shaves, prisms of bars and plates that support the windup arms, and the machine's frame. Elements that vibrate may cause vibration in other parts of the machine as the excitation pulses travel through the connecting parts. Winding problems may develop even when the excitation pulses are short. The amount of boundary air entrapped in these intervals is sufficient to cause telescoped rolls, which usually are lost production. A thorough analysis of the machine may be required to determine which part or parts are causing the problem at the desired speeds. Such an analysis can start with the lay-on roller and the winding core. A lay-on roller is normally considered to be a rotating beam that has a centered uniform load, as shown in Figure 8.5.

The equation for roller deflection when the lay-on roller is considered to be a uniform load on the winding roll is as follows:

$$\begin{aligned} EI(y) = & -((w \times X^4)/24) + ((w \times L \times X^3)/12) \\ & + ((M \times X^2)/2) - ((((12 \times M \times L) + (w \times L^3)) \times X)/24) \end{aligned} \tag{8.3}$$

where

y = roller deflection, in.;
w = lay-on roll loading force, PLI;
X = distance from the left end of the winding roll for the point being considered, in.;

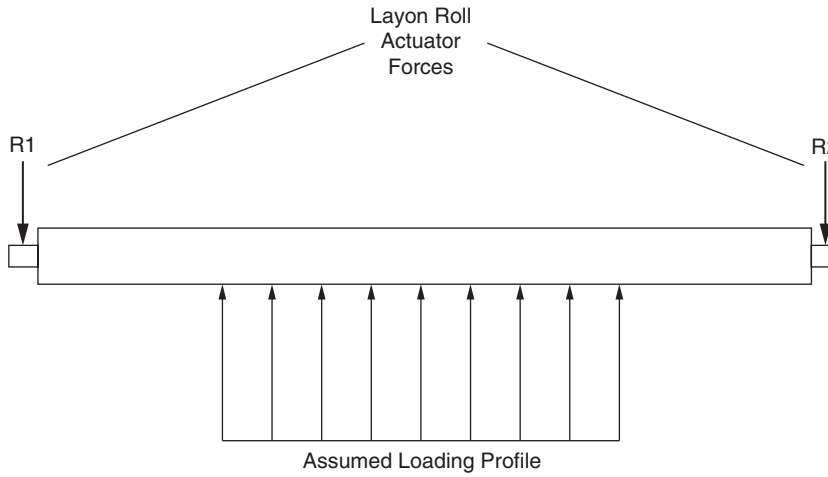

Figure 8.5 Force diagram for overhung lay-on roller.

E = stress/strain modulus of the lay-on roller shell;
I = area moment of inertia of the lay-on roller shell;
L = width of the layon roller, in.;
M = moment created by the lay-on roller overhang distance and the force of the actuators on the end of the lay-on roller shaft (determined by multiplying the overhang distance by the reaction force, as shown in Figure 8.6).

The loading as shown in Figure 8.5 will produce a deflection curve about the center portion of the roller. This curve is almost parabolic in shape when the loading forces are applied at the roll ends. Figure 8.7 shows two roller deflection curves. The deflection curves illustrate that the actual loading of the lay-on roller on the winding roll cannot be uniform as assumed in Figure 8.5. Although there is some stack compression of the winding roll, pressure on the lay-on roller is not uniformly distributed on the working surface as it would be if it were rolling on a fluid.

You can approximate the loading for specific points on the lay-on roller surface for vibration analysis using the following procedure.

1. Assume that the lay-on roller loading pressure at all points on the working surface may be approximated by superposing two, mirror image, nonuniform loads on top of a smaller uniform load, such that the loading aggregate has the same value as if it were a uniform load.
2. Write the beam moment equations that can be double integrated to determine the deflection at each point on the lay-on roller surface. Figure 8.8 illustrates this type of loading.
3. Assume (3w/2) + (w/4) is the value of max load at roller ends and (w/4) is a uniform load across the full roll width.

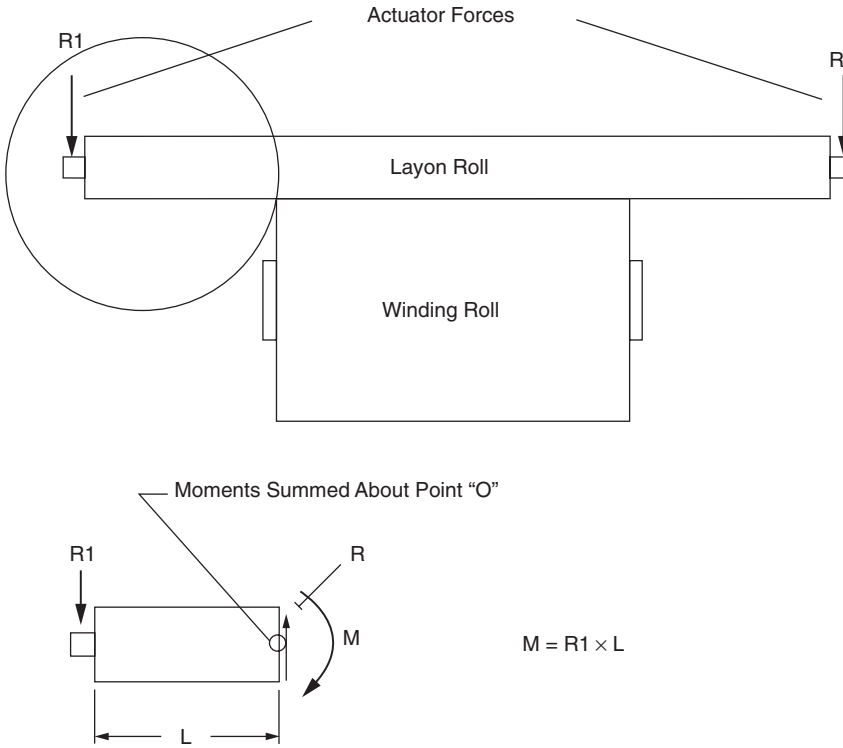

Figure 8.6 Bending moment on lay-on roller at roll edge from reaction force.

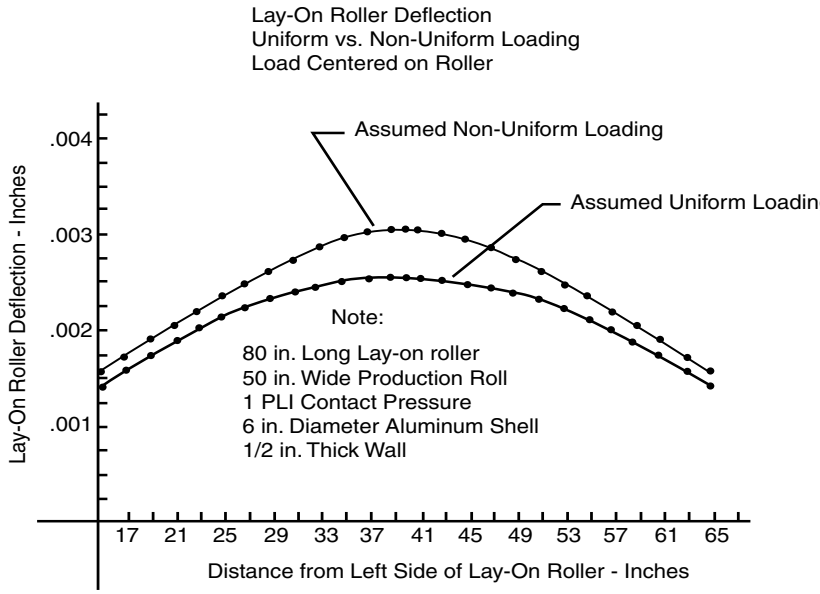

Figure 8.7 Lay-on roller deflection diagram for given data on overhung lay-on roller.

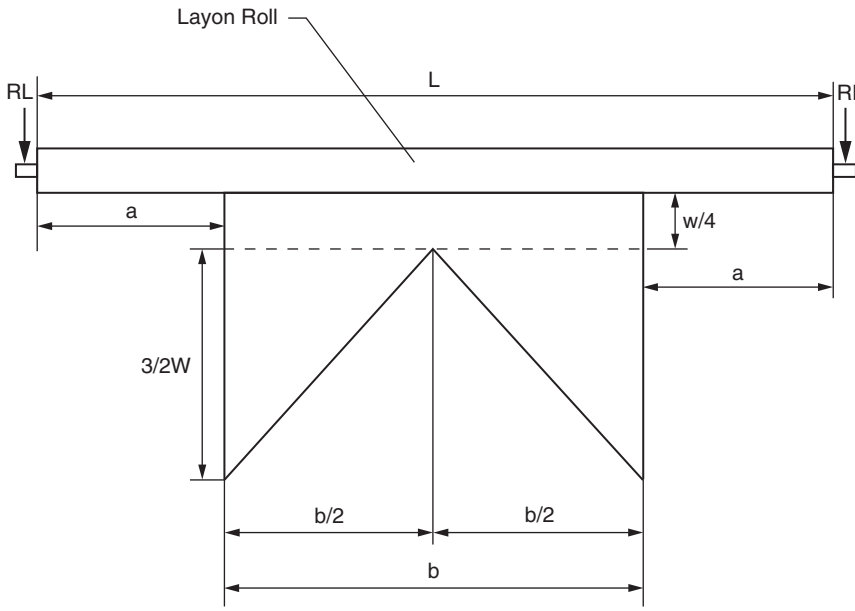

Figure 8.8 Revised loading diagram for overhung lay-on rollers.

4. Write the actuator forces as reaction forces in a simple beam with the given load assumptions. Ignore the roller shell weight for this calculation.
5. Write the beam moment equation for roller loading in terms of the assumed variables about the left-side reaction force. Because of the assumed symmetry, the moment equation need only cover one half of the roller.
6. Then double integrate the loading equation to get the deflection at each segment. The other half will be a mirror image of the first half calculated.

The example in Figure 8.8 may be analyzed as follows:

Reaction or loading forces = RL and RR.

$$RL + RR = w\ b,\ RL = RR = w\ b/2 \tag{8.4}$$

The equation for finding the deflection of a beam is:

$$EI \iint d^2y/dx^2 = M \tag{8.5}$$

The equation for calculating the area moment of inertia of the roller shell is:

$$I = \pi/64(D_o^4 - D_i^4) \tag{8.6}$$

where

D_o = outside diameter (in.) of the roller shell;
D_I = the inside diameter (in.) of the roller shell.

The equation for the beam bending moment from x = a to x = L/2 is:

$$M_x = -((3w/4b)x^3) + ((3a/4b + 7/8)wx^2) - ((7/4 + 9a/4b)awx) + (3a^3w/4b) - (bwa/2) \tag{8.7}$$

The equation for deflection after integration is:

$$\begin{aligned} EIy = & -((3w/80b)x^5) + ((7/96 + 3a/48b)wx^4) \\ & -((((9a/24b) + (7/24))aw)x^3) \\ & +((((3a^2/8b) - (b/4))aw)x^2) + (((3L^3/256b) - (7L^2/192) \\ & +(3aL^2/96b) + (7aL/32) + (9a^2L/32b) - (3a^3/8b) \\ & +(ab/4))wL)x \end{aligned} \tag{8.8}$$

where

E = stress/strain modulus for the lay-on shell material;
a = the distance from the lay-on roller end to where production roll begins;
b = width of the production roll;
w = desired lay-on roller load, PLI.

Estimating the critical speed can be done as follows. First, make the assumption that the lay-on roller is opposed by only four point loads, and that these loads are located at points (a + (b/6)), (a + (b/4)), (a + (3b/4)), and (a + (5b/6)). Calculate the deflection at each location by formula. Calculate the load (weight) of each block above the support point, using Figure 8.8. The formula for critical speed is as follows:

$$(f) = \text{Rotation speed of shaft, rps} = (1/2\pi)((g(w_1y_1 + w_2y_2 + \ldots + (w_ny_n))/((w_1y_1^2) + (w_2y_2^2) + \ldots(w_ny_n^2))))^{1/2} \tag{8.9}$$

where

g = gravitational constant, in./sec^2,
w = weight, lb, or loading at point x, weight of block supported at point x, in the deflection equation;
y = deflection at point x.

Using the parameters of Figure 8.7 in these equations produces a critical speed of about 3880 rpm, which is greater than 6000 ft/min for the type of roller shell used in this example. Higher loading pressure will lower the critical speed. This example shows that the roller shell described is quite adequate for very high-speed winding.

Lay-on roller issues

The single most important part of any high-speed winding process with nonpermeable webs is the lay-on roller. One of the functions of the lay-on roller is to reduce the amount of entrapped boundary air between the winding wraps. Reducing the amount of boundary air below the asperity height on the web can eliminate telescoping of the wraps as the roll is being wound. The lay-on roller also tightens the wraps on the roll as it is winding thereby increasing the MD tension in the wraps. The lay-on roller also compresses the webs around the surface asperity so that the wrap centerlines are wound closer together. This last item is a small effect, but it can significantly reduce the amount of disturbance that gage/caliper variation has on the winding process. This section examines the issues affecting the lay-on roll function and recommends guidelines.

Optimum thread path around lay-on roller, effects of eccentricity

Figure 8.9 shows the four basic ways that lay-on rollers are employed during winding.

Delta L is the extension of the web due to eccentricity in the winding roll, and e is the eccentricity that the winding roll exhibits as it rotates. Eccentricity is caused by the rotation of a roll about an axis other than the true center of the roll. The amount of eccentricity measured at the core usually is much less than the amount of eccentricity measured on a large roll made on that core.

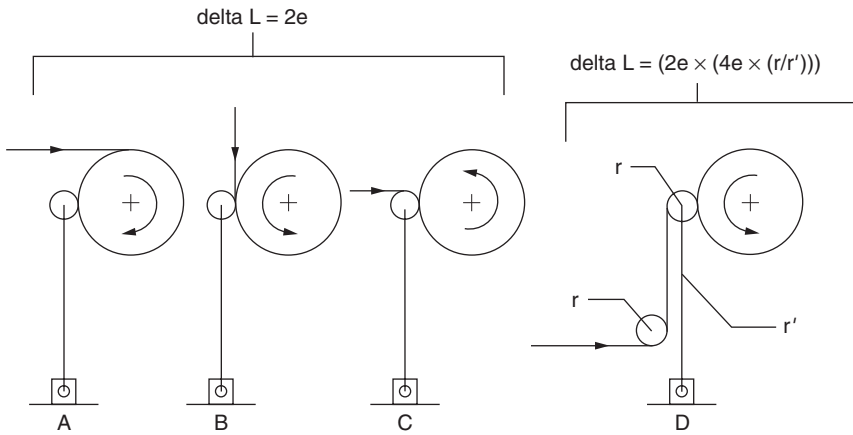

Figure 8.9 Web approaches to lay-on roller.

Another way of saying this is that eccentricity begets eccentricity. You may recall from Equation 1.6 that ΔT is the tension variation in a web caused by web elongation and is equal to the stress/strain modulus multiplied by ΔL multiplied by web thickness (t) and then divided by L. The thread path shown in Figure 8.9D presents the greatest amount of thread-path length change due to roll eccentricity. However, this thread path is preferred over the other three methods because of the web tracking ability of the combination lead-in and lay-on rollers. Boundary air exclusion efficiency in Figure 8.9D is about the same as the configurations shown in Figures 8.9A and B. Web tension greatly affects the lay-on roller contact pressure in Figure 8.9C. If the lay-on roller configuration is like Figure 8.9C lay-on pressure control can be improved by changing it to that shown in Figure 8.9A.

For a production roll winding such as shown in Figure 8.9A, look under the web and above the lay-on roller to see how well the production roll is winding. Many observers wrongly conclude how the roll is winding because they look only at the first partial wrap that has not had most of the boundary air removed. The configuration shown in Figure 8.9A is sometimes called the "ironing roller method." This configuration is simple and easy to use in the manual mode, but is not compatible with most automatic cutoff devices on turret winders.

The configuration shown in Figure 8.9B is not recommended because there is no web spreading to counteract the web neck-in before the web touches the lay-on roller. Also, there is no reinforcement of web stiffness, and the improvement in web spreading, that bending around a roller gives to thin webs before the web is laid down. When the lay-on roll configuration is like that shown in Figure 8.9B, thin webs are likely to feed into the lay-down nip with corrugations due to the necessary winding tension. There are four main variables that determine the amount of eccentricity: (1) the core chucks, (2) the type of mandrel used in the core, (3) the winder chucks and bearings, and (4) the roundness/straightness of the cores.

Cores and mandrels are discussed earlier in this chapter. Core and winder chucks are often the cause for which the mandrel and/or cores receive blame. Eccentricity on winder chucks is often caused by worn bearings, especially on self-aligning "tail stock" type chucks on slitting machines. The spherical aligning ball is not meant to rotate in operation. Clearance in the joint increases dramatically once the ball begins to rotate with the chuck. Increased clearance causes wobble and eccentricity in the winding roll.

A frequent problem is poorly aligned core chucks.. When the core chucks are not aligned well, the core must adjust itself during each revolution to stay in place. The core attempts to "walk" out of the chuck, and each time the core adjusts, there is eccentricity in the winding roll. There is no substitute for well-aligned chucks during the winding process.

Lay-on roll dynamics

The process of eliminating most of the boundary air between winding roll wraps on other than very narrow rolls is complex. The lay-on roller must

stay in intimate contact with the web within the entire footprint of the nip at all times. For optimum boundary air exclusion, the contact pressure must remain constant in the footprint at all times. Eccentricity in the winding roll generates forces that work to negate constant nipping pressure across the roll width. This happens because the lay-on roller must move in a pivotal or linear fashion to follow the run-out in the winding roll. The inertia of the lay-on roller and the associated equipment delay that movement and prevent the actuators from keeping constant contact pressure with the winding roll. Therefore, the optimum design for the lay-on roller is one that will follow winding roll run-out with the least amount of variance in contact pressure.

Roll eccentricity usually does not occur at the same time in a locus of points across the full width of the winding roll. The true axis of the winding roll is often skewed with respect to the axis of rotation. In other words, during rotation, one side of the roll surface will be closer to a horizontal TD reference line than the other side. This movement appears as a wobble to the observer. Wobble in the winding roll forces the lay-on roller axis to be skewed with respect to the true rotation axis, which is parallel to the true axis of the rotating chucks holding the winding roll.

Usually, the lay-on rollers are mounted at the end of arms that pivot into and out of operating position. These arms may be short when the lay-on roller assembly is mounted on a linear traveling carriage that adjusts for winding-roll buildup, or they may be long with stationary pivot points that are anchored to the machine. When one lay-on roller arm is rotated without the other, the lay-on roll axis is skewed by the parameters governing the rotation arc of the arms.

Because of the nonaligned tracking forces between the lay-on roller surface and the winding-roll surface, an unstable condition can develop and the lay-on roller may bounce against the winding roll. Sometimes there is a torque shaft connecting the arms through the pivot axis. The torque shaft is used there to make sure both arms rotate together when they are moved into or retracted from operating position. The shaft is necessary because air cylinders do not extend uniformly, even when very accurate flow control valves are used on the exhaust side of the actuators.

A stiff torque arm will lift the side of the lay-on roll not being rotated out of position by the winding roll eccentricity, out of contact (or greatly reduce its contact pressure) with the winding surface. Competent designers will call for splitting the torque shaft and installing a split-shaft coupling that has a small amount of rotational clearance. The rotational clearance in the torque-shaft coupling allows the two arms to be at slightly different degrees of rotation, so that both ends of the lay-on roller can stay in contact with the winding surface during winding-roll eccentricity.

Initial alignment of the lay-on roller axis to a precision core is essential to have near uniform contact on the winding roll. The preferred method of obtaining this alignment is to install a device that uses harmonic gears for very fine and accurate adjustment on the split-torque shaves in addition to the coupling that provides a small amount of rotational freedom to the torque

shaves. The device is easily locked in place once the lay-on roller surface has been matched to a precision core surface. A precision core is a must for lay-on roller aligning. This core should never be used for anything but setup after installation or maintenance.

Pivoting lay-on roller systems often operate with different pressures on the actuators. This pressure offset usually is used to compensate for the nonaligned initial setup or after a maintenance outage. Sometimes the offset is an attempt to compensate for tapered caliper or gage. Operators faced with tapered gage or bad alignment will argue with veracious zeal that the ability to operate each side of the lay-on roller at different pressures is necessary to wind quality rolls. Such people should carefully read the following section.

Linear traveling lay-on roller systems also must compensate for the skewed winding roll axis to keep contact pressure nearly uniform across the winding roll surface when eccentricity is present. However, the moving carriage of the linear system must be rigid to prevent binding the carriage as it is moved into and out of operating position on its side rails. One method to resolve this problem is to install shortpivot arms that hold the lay-on roller. Shortpivot arms on the linear carriage provide flexibility for lay-on roller contact. Each of these arms has its own actuator to maintain contact pressure. An infrared beam (or similar type of device) on the carriage senses buildup on the winding roll and signals a servo unit to move the linear carriage to compensate appropriately for roll buildup.

The best lay-on roller configuration for flexibility is one that uses a combination center-pivoted metal-surface backup roller with an independently suspended, free-swinging elastomer-covered lay-on roller. This combination gives near uniform TD contact during wobble type movements of the winding roll. Figure 8.10 shows one of the most stable lay-on roller configurations I ever tested on eccentric winding rolls. The short pendulum arms supporting the lay-on roller provide uninhibited freedom of movement to keep the lay-down nip contact at near constant pressure during the wobble movements of the winding roll. The center-pivoted backup roller adjusts to the changing axial movements of the lay-on roller with low inertia. There is one very important rule that must be followed with this design: The axis of the pivot pin in the center of the pivoted backup roller must be perpendicular to the plane between its axis and the axis of the winding roll. In Figure 8.10 the centerline of the stationary shaft that holds backup roller is parallel to and located at the elevation of the winding roll axis. The pivoting support arms are very stiff but light in weight. A servo unit moves the carriage when very small deflections of the pivot arms are detected.

One key to stability with this system was the control-circuit design for the servo unit. The servo control circuit was programmed to wait until the oscillation movements of the assembly arms were outside a predetermined operating zone before signaling the servo to move the carriage. A small laser detected the assembly-arm rotation. The program was divided into five zones when the carriage assembly was put in operating position. The

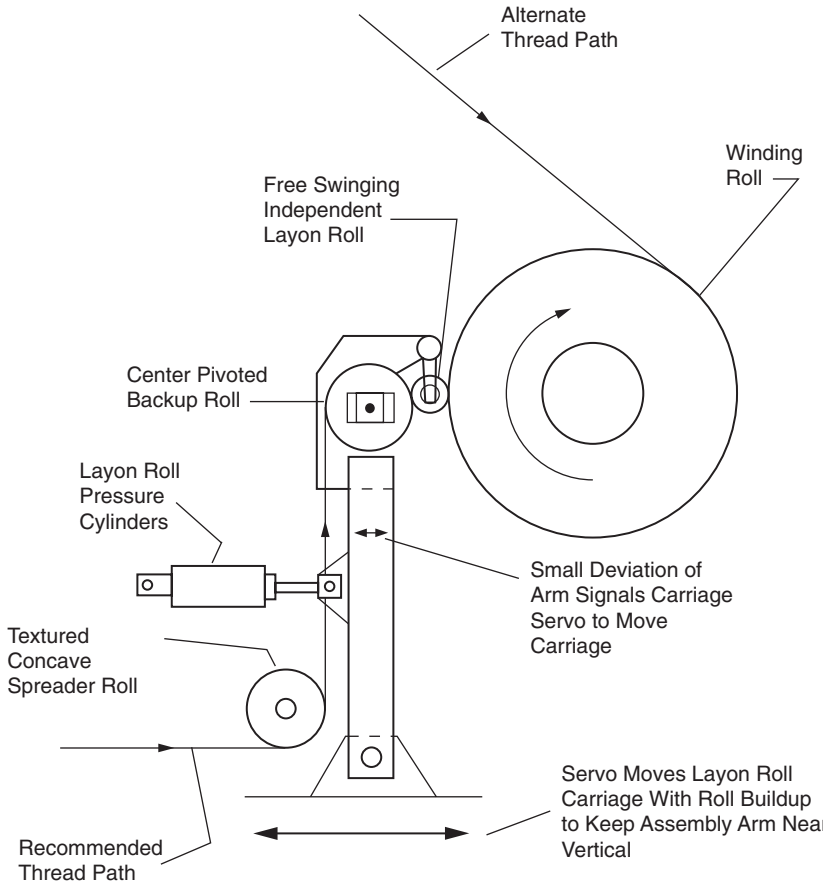

Figure 8.10 Small-diameter lay-on roller for high-speed processes.

forward zone allowed the carriage to advance rapidly until contact was made with the winding roll. The second zone slowed the servo speed until the center or operating zone was reached. The carriage was stationary in the operating zone. As buildup on the winding roll occurred and the lay-on assembly arms were rotated backward into the third zone or the carriage retreat zone, the servo was commanded to retreat slowly, but only after five full winding roll rotations were completed without any intrusions detected in the operating zone. The carriage stopped retreating when the operating zone was again reached as the assembly arms rotated forward during the retreating movement of the carriage. The last zone was an emergency retreat speed for the servo. There was also an end-of-rotation travel switch, hard wired, that bypassed the control circuit to prevent catastrophic damage.

Figure 8.11 shows the center-pivoted backup roller in more detail. The assembly arms were tied together with a split-torque shaft coupled with

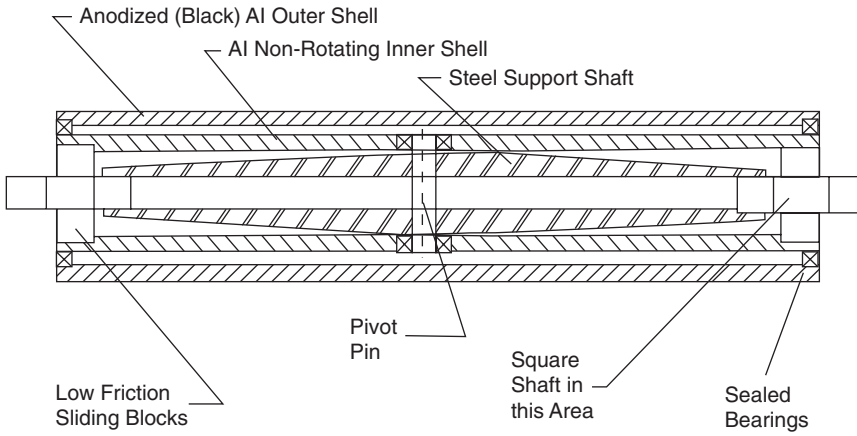

Figure 8.11 Cross-section of center-pivoted backup roller.

a split-shaft device that had harmonic gears. Once the lay-on assembly arms were aligned with a precision core on the winder, no more adjustments were needed.

Stack compression is another complexity of winding with a lay-on roller. Under normal winding conditions, the lay-on roller will compress several layers of web wraps and bring their surfaces closer to each other under the nip than they are around the rest of the winding roll circumference. This stack compression is made possible primarily by two phenomena: (1) the amount of entrapped boundary air between the winding wraps and (2) the web can be made to deform around the surface asperity.

Surface asperity is necessary to prevent the webs from blocking (sticking together) as they are pressed together under the lay-on roll nip or any other nipping process. Webs with high surface asperity ($A > 0.25\ \mu Ra$) will usually deform sufficiently around the asperity under the nip to be a significant variable in the winding process. A web with high surface asperity is much easier to wind than webs with low surface asperity ($A > 0/0.10\mu$) because deformation around the surface asperity reduces the effect of caliper or gage band buildup. Also, higher surface asperity gives the web good slip properties (low coefficient of friction). Good slip reduces slip dimple defect generation in the nipping zone.

The largest amount of stack compression comes from boundary air that is entrapped between the wraps. Figure 8.12 shows the nipping mechanics of a lay-on roller operating on a winding roll.

The highest nipping force is in the low-slip zone on a line between the centers of the lay-on roller and winding roll. This zone also has the highest frictional force between the incoming web and the last wrap on the winding roll. Essentially, the velocities of the incoming web, the lay-on roller surface and the last wrap on the winding roll are the same in the low-slip zone. Because of the radius difference between the two rolls, the outside wrap

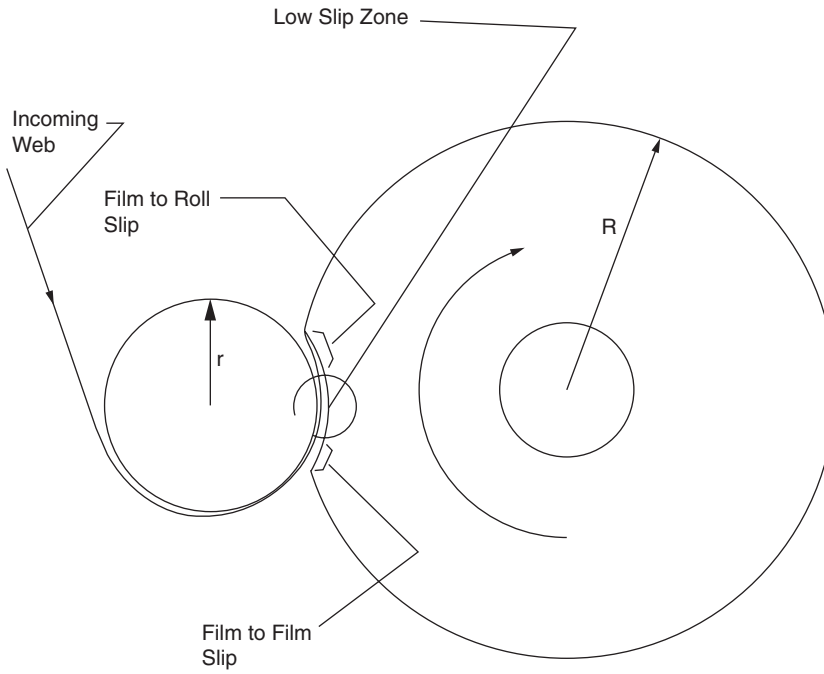

Figure 8.12 Stack compression of winding roll by lay-on roller.

of the winding roll is moving at a higher velocity before the nip than in the low-slip zone. Thus, it must slow to the speed in the low-slip zone as it approaches that zone. And there is film-to-film slip in this region. Also, the larger amount of stack compression, the larger amount of slip is necessary to make the velocities equal in the low-slip zone. There is film-to-roller slip on the exit side of the lay-on roller nip as the radius of the winding roll expands after the nip. The lay-on roller surface must allow this slip to freely occur or abrasion of the roll surface will occur. Debris is usually generated when the lay-on roller surface is abraded. Debris adds to the slip-pimple generation.

Smooth web surfaces are vulnerable to slip-pimple defect generation by debris particles in the film-to-film slip zone. Slip-pimple generation from debris appears to occur when debris particles lock the webs together in the film-to-film slip zone, causing a very small amount of web stretching to occur on the incoming web around the particle. This stretching reduces web thickness in front of the leading edge of the particle and increases thickness around and on the receding edge. Because of the increased thickness in the localized area around the debris particle, the relative velocity is increased in the film-to-film slip zone, and a slightly greater amount of stretching occurs around the particle on the next and each succeeding pass, as the area goes under the lay-on roller nip. Thus, there is a continual buildup around the particle area and the area becomes an objectionable defect when it is visible

in the web. Slip-pimple defects may also occur without the particle seeds described above. Smooth surface webs without enough surface asperity to prevent localized blocking (web adherence to web) under the lay-on nip generate significant slip pimples immediately when winding is commenced, whether a debris is present or not.

Very smooth surface webs cannot be successfully wound with a lay-on roller without the introduction of some form of slip agent. Sometimes it is possible to meter the right amount of boundary air between the webs that will provide a lubricant for slip but still allows the webs to interlock on the surface asperity high points. This must be very carefully done with a textured lay-on roller surface. Web stiffness is a significant variable in the metering process. Stiffer webs will require less metered air between the wraps than very flexible ones, because the entrapped boundary air is better dispersed between the wraps of the stiffer webs. Each product has its own characteristics that determine the amount of boundary air to meter into the roll, so there is no one lay-on roller surface texture that is optimum for all products. Sometimes an interleaf material is used to perform this function on very valuable end-use materials, but this process is limited because it is expensive.

A special air lay-down device was used to wind very good-looking rolls of very smooth webs at high speeds (up to 1000 ft/min) without producing slip pimples, but the rolls would uncoil unless they were securely taped while tension was still being applied to the last wrap. Lagging the rolls to stop the uncoiling did not solve the uncoiling problem. The lagged rolls would uncoil a few days later when the holding tape was removed. They also could be easily telescoped when the outside wraps were pushed in the transverse direction.

Extended experiments with this device indicate that web interlocking is a necessary and not an expedient part of the winding process in most winding applications. Surface asperity or some other means of locking the webs together, such as applying edge-thickening techniques at the roll edges, is required for commercial winding processes on very smooth films. Being able to wind without a web interlocking function is of little practical value if the roll does not keep its integrity after it was doffed.

The special air lay-down device, shown in Figure 8.13, lays the web down on the winding roll by a pressure bubble. Air pressure in the inlet channel ranges between 3 and 4 psig. Flow was between 300 and 400 cfm. Inlet air pressure was not sensitive to speed in preventing excessive boundary air from being ingested between the wraps. The bubble ends were open to the atmosphere and most of the bubble air escaped out the ends. The bubble was very stable during operation. The upper seal was a very smooth rounded bar that was held away from the winding roll surface by air pressure in the bubble working against the projected frontal area of the air lay-down device. An insignificant amount of air escaped under the bar. The lower seal contained a full-width nozzle that was perpendicular to web. The web was held away from the seal surface by bubble air escaping from each side of the nozzle. The device applied pressure against the bubble to exclude bound-

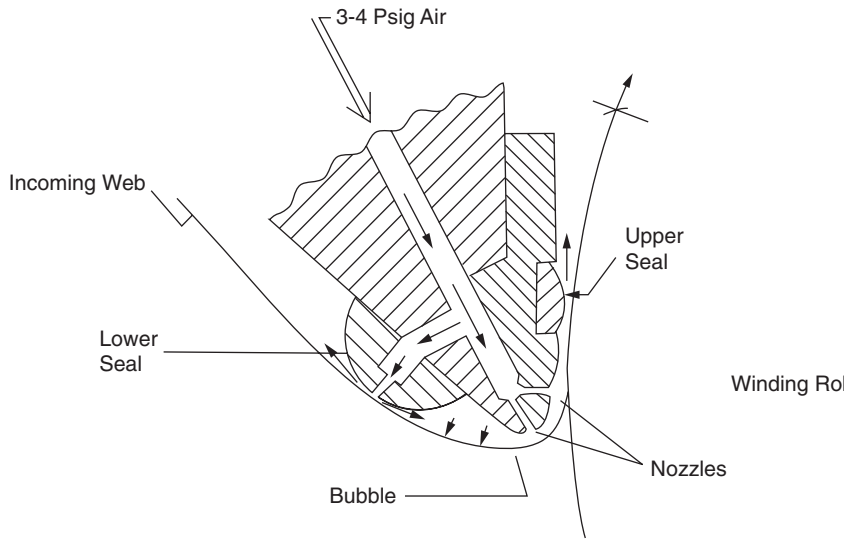

Figure 8.13 Air lay-down device.

ary air. The loading pressure ranged from 0.5 to 1.5 PLI. Air actuators were used to apply this pressure.

The air lay-down device was mounted on pivot arms and these arms were mounted on a horizontal linear moving carriage. A small movement of the pivot arms activated the servo that moved the carriage, so that the pivot arms remained almost vertical during winding roll buildup. The nozzle was deckled to keep the jet flow inboard of the web edges. The main channel of the device was deckled so that both outlets were adjusted for web width at the same time. The deckles seemed to be placed optimally when set in about ½ in. from the web edge on each side. Winding speeds up to and including 1000 ft/min were demonstrated on a full range of surface roughness, and on film thicknesses from 2.5μ to 175μ films without excessive boundary air entrapment.

There are two major limitations to commercial use of this device for winding. One limitation is noise, especially on webs > 12μ thick. The noise is produced because the nozzles tend to vibrate the thicker webs at high frequency. The other is the energy consumption for the process. A 150-hp motor is used to drive a 12-stage compressor for the air supply. A cooler is needed after the compressor. A good filter after the cooler is necessary to prevent debris from getting on the web.

There was another interesting test result. Debris was thrown on the web upstream of the device while it was winding clear, smooth webs. This debris did not cause slip pimples in the wound roll. Inspection of the device after the test showed debris had collected on the bottom seal and had blown out the ends of the lay-down bubble. The device had static neutralizer wires operating during this test. It was not tested with the bars turned off.

Lay-on roll parameters

Diameter is one of the parameters to consider when choosing the lay-on roller. There is no optimum diameter for all winding situations. Generally, for any given hardness value for the roll cover, a smaller-diameter lay-on roller will be more efficient than a larger one at removing boundary air during high winding speed, because the nipping footprint is smaller on the smaller roll. The smaller footprint increases the loading pressure (psi) in the nip for any given down pressure supplied by the actuators. And there is more stack compression with the smaller roller that results in increased wrap tension on the winding roll. When the film surface has sufficient asperity to bear the increased loading without localized adherence (blocking), smaller-diameter lay-on rollers are preferred. However, deflection in small-diameter rollers is prohibitive unless the small roller is used in conjunction with a backup roller of larger diameter.

When the web surface cannot withstand heavy loading, a larger-diameter roller, perhaps with a softer covering, is advisable. Very clear films with little asperity height are examples of webs that must be wound with very low loading. Softer covers and larger diameters widen the nip footprint and reduce loading (psi) on the web surface as was previously explained. Some web surfaces cannot be wound with a lay-on roller unless the web edges are thickened to support the lay-on roller and keep the wraps from being compressed. Thickened web edges increase the boundary air entrapment and present many quality problems with the wound rolls. There will be further discussion of this later in this chapter.

Very wide winding machines generally have large-diameter lay-on rollers because of deflection considerations. However, there is always sufficient deflection in these very wide rollers to allow excessive boundary air to be entrapped between the winding roll wraps. A backup roller is still the best way to increase lay-on roller stiffness sufficiently for good boundary air exclusion during high-speed winding, although new construction materials are now available to build stiffer roller shells with lower deflection.

There are some major winding advantages when small diameter flexible rollers are properly used with backup rollers. These advantages generally apply when winding rougher surface films. The surface roughness of these films should be at least Ra = 0.25μ or greater.

Figure 8.14 illustrates how the rider/lay-on roller will spread the web during lay-down due to curvature induced by the contact forces of the backup roller and winding roll. The roller experiences lifting forces as backup roller force is applied because its axis is above a line between the backup roller and winding-roll centers. The roller deflects and bows so that its footprint tracks in a spreading direction on the winding roll. Experience has taught that the lay-on roller should be mounted on pivot arms with separate actuators, so that it may be preloaded against the backup roller or against the winding roll. Preloading gives the operator more control over the bow during operation, and is necessary to keep the roller

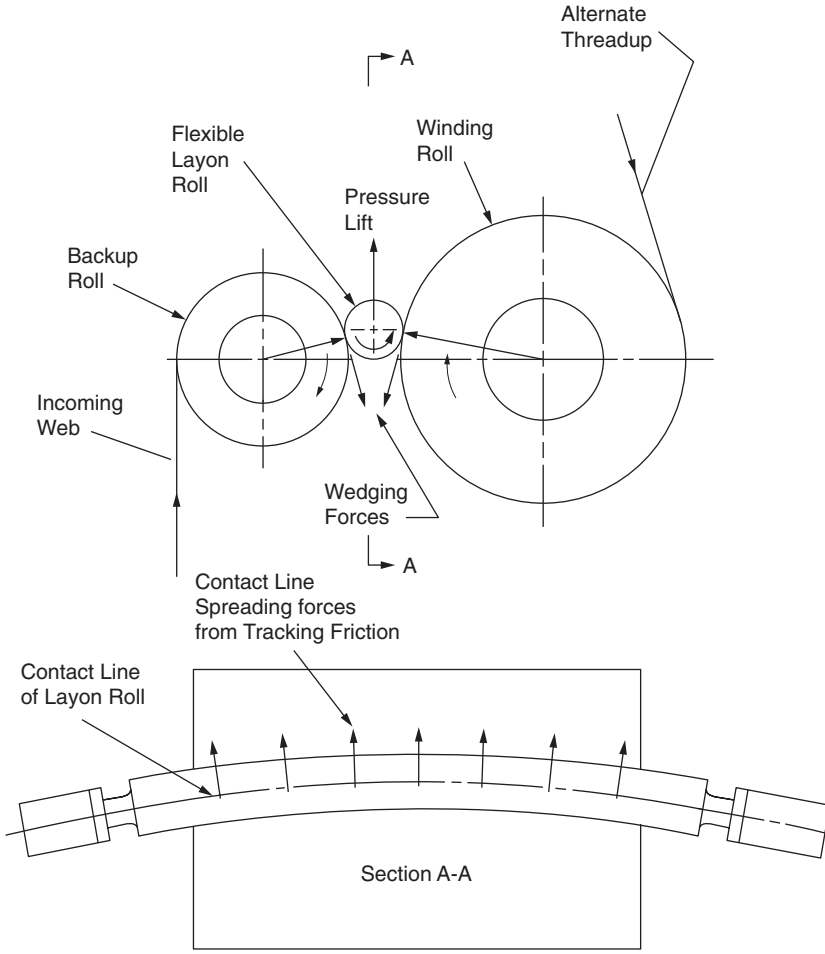

Figure 8.14 Web spreading with flexible lay-on roller.

operating in a compound bow so that there can be nearly uniform contact along the curved contact locus of the winding roll. Figure 8.15 shows how this was successfully commercialized on slitting machines. Figure 8.16 shows the concepts for forming a compound bow by preloading the lay-on roller against the new core. This system worked well on thin capacitor and thermal transfer type films at speeds up to 1500 ft/min. The backup roller should be driven for best results because there is considerable rolling friction from the wedging forces between the backup roller and the winding roll. The drive power conditions seemed to be optimum when about 80% of necessary winding power is supplied by surface friction from the backup roller and 20% of the winding power from the winder drive. There were several fairly rough film types running on these machines. The centerline of the lay-on roller should be located a small distance above a line between

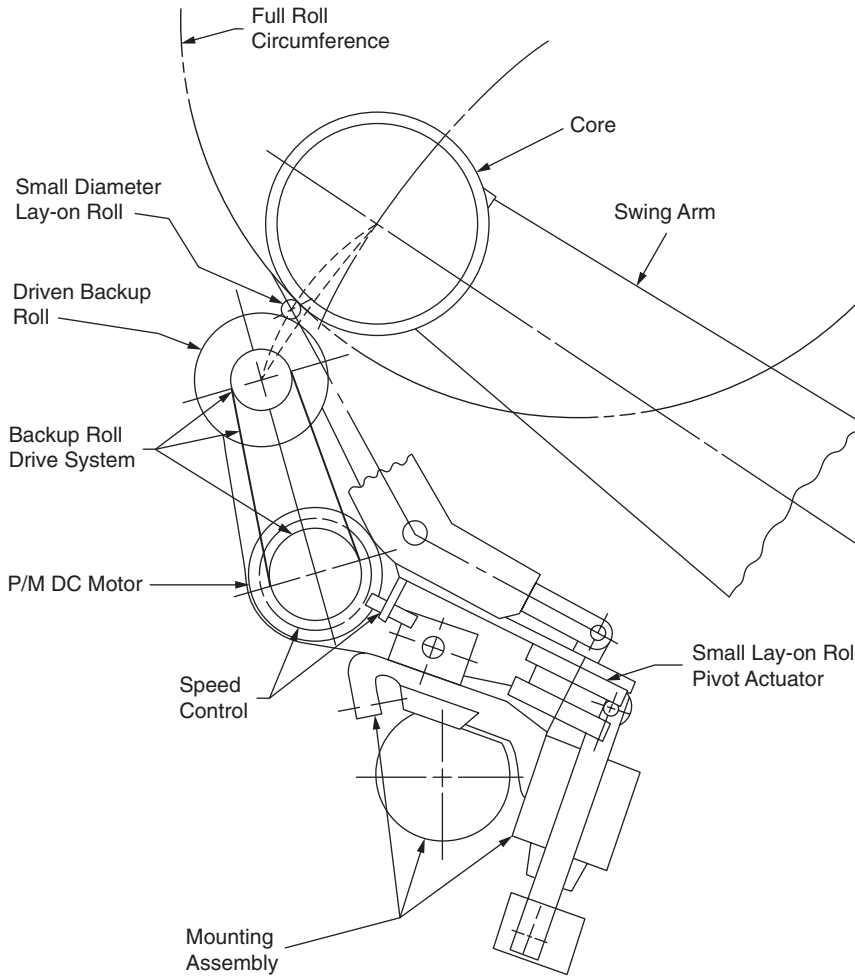

Figure 8.15 Flexible lay-on roller on commercial slitter.

the centers of the backup roller and the winding roll. The triangle formed by this elevation produces the upward thrust that bows the lay-on roller when operating.

Lay-on roller surface is another parameter worth much consideration. Very thin webs require a much smoother lay-on roller surface than thicker webs for more efficient boundary air exclusion. The requirement to exclude more boundary air from thinner webs during winding is necessary because pockets of boundary air between the wraps will stretch the thin webs and form winding defects. The roughness of the lay-on roller surface for high-speed winding on films ($t < 6\mu$) was determined to be optimum at $Ra < 0.050\mu$. Roller hardness was also determined to be optimum at about 72 shore A durometer when winding the above films.

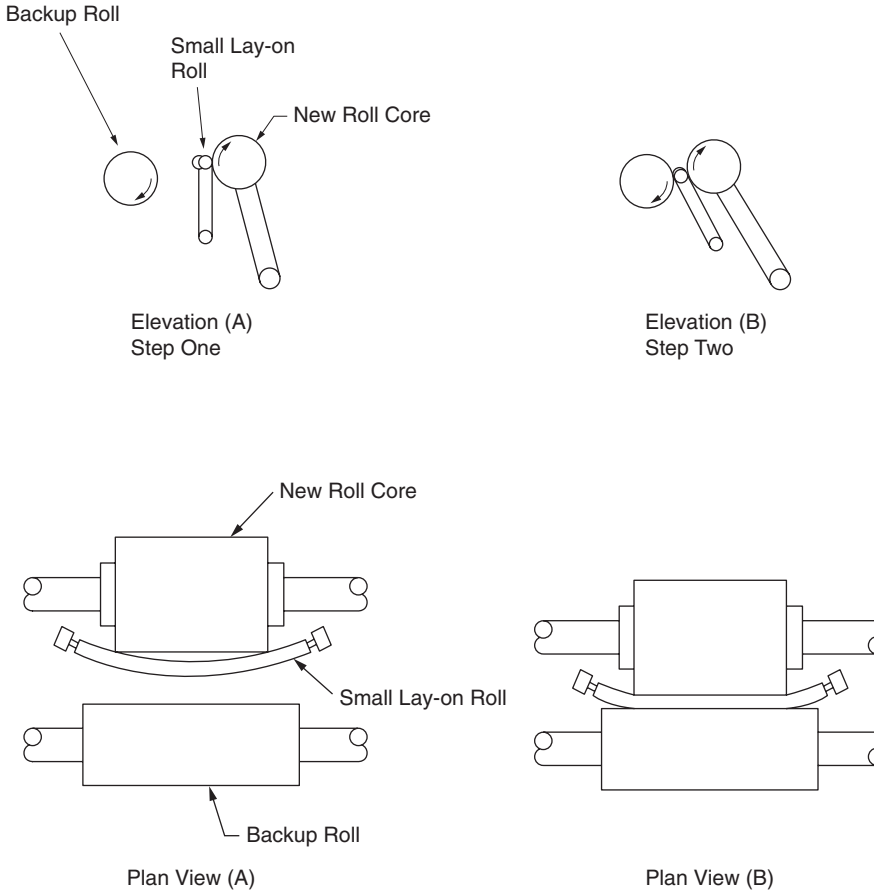

Figure 8.16 Mechanics of double bend in flexible lay-on roller.

Lay-on roller surface hardness is still another parameter that must be given careful consideration. Hardness and covering thickness are somewhat related. Thin covers ($t < 1/4$ in.) behave during winding as though they were made of harder material. There is more resistance to elastomer displacement under pressure when the covering is thin due to the close proximity of the roller shell. Thicker covers ($t > 1/2$ in.) behave as though they were made of softer material for the opposite reason.

Excessive deformation in the lay-on roller nip may cause more boundary air than desired to be entrapped between the wraps. There is also a scratch potential as the elastomer deforms and then reestablishes position after the nip. The hardness range for commercial lay-on roller coverings is usually between 45 and 75 shore A durometer. Optimum hardness is determined by the smoothness of the web, desired winding speed, lay-on roller diameter, and amount of loading that the web surface can resist in stack form.

The lay-on roller should always be centered over the winding roll because nip loading is very difficult to control when the winding roll is off center. The maximum deflection of the lay-on roller does not occur over the center of the winding roll but nearer the longer unloaded side. Adjusting the actuator on the longer unloaded side to compensate for the additional down pressure on that side of the winding roll is very difficult to do. Off-center winding is not recommended.

Winding tension/profiles by products and processes

Generally, the first opportunity for single-sheet quality deterioration begins during the first winding process. The next opportunity occurs when that roll is in lag storage. Some believe that the web must be wound at the lowest possible tension to preserve single-sheet integrity. A further extension of this general thinking is that excessive boundary air entrapped between the wraps is best removed by the lay-on roller nipping pressure and not by increasing web tension. Many variables in the winding process must be considered when trying to find the lowest preferred tension for any particular product. Also, there may be limitations on how much nipping pressure can be used to exclude the excessive boundary air, as was previously discussed in the lay-on roller section.

Wound-in web tension is a function of two operator controllable variables: (1) the incoming tension that is monitored with a load-cell roller or other device just prior to the windup, and (2) the amount of stack compression that occurs under the lay-on roller. There seems to be no other way (other than a relative one) to *measure* the amount of tension induced by stack compression as the roll is winding. Roll hardness is a relative measurement of wound-in tension and can be correlated to both types of tension-producing mechanisms. A reliable on-line winding-roll hardness- measuring device would help operators control their winding operation and highlight the presence of gage bands that could be very helpful for die control.

There is no better way to indicate the web quality deep inside a production roll than to take hardness readings after the roll is doffed. A hardness reading of 35 to 40 RHO on the Beloit hardness meter is usually a good target for large-diameter (up to 32 in.) production rolls on film products. However, even with good hardness readings, single sheet quality may be better preserved in the outside one-third of large production rolls than the inside two-thirds portion; and usually the middle one third has better quality than the one-third next to the core.

The starting tension during any winding operation must be at a level that keeps the web flat on the rollers between the winding roll and the last tension isolation roller. There is a significant difference in the appropriate winding tension levels for different products. On high strength materials in most cases, this tension will not exceed 10% of the product's yield strength. However, some low-strength webs, especially those that are coated with adhesive, may have to be wound as high as 20% of their ultimate strength. Figure 8.17 illustrates

% Taper = (starting tension – ending tension)/starting tension
α = % Taper/100

Constant Tension is: T final = T initial
Taper Tension is: T final = T initial – αT initial
Constant Torque is: T final = (radius initial/radius final) $\times$ T initial

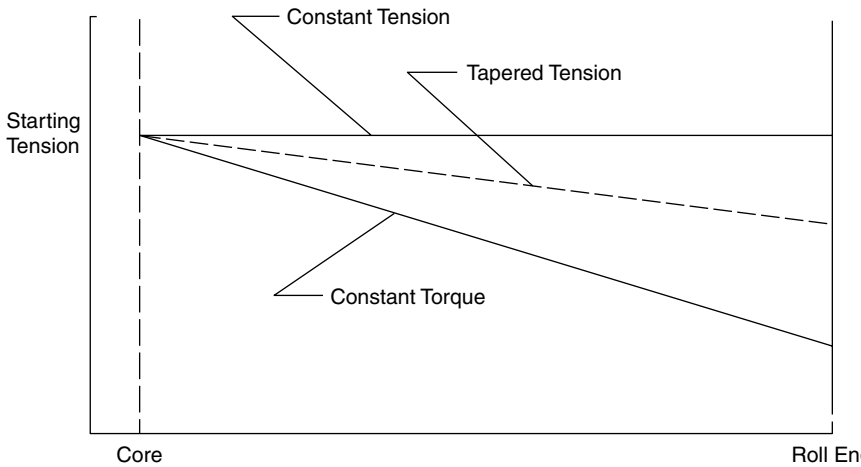

Figure 8.17 Profiles of web tension before winder during the roll buildup.

the terms used to describe winding tension and tension taper. Only very small buildups of elastic materials can be wound at constant tension because the elongated wraps apply significant compression toward the core. Web materials with very high stress/strain moduli can be wound nearer to constant tension than materials with low stress/strain moduli. Small buildups of most materials can also be successfully wound at constant torque. Constant torque is the oldest and simplest method of controlling the winder motor. However, for modern winding speeds and desired roll diameters, the outside wraps on most non-porous web materials do not have sufficient tension to maintain good roll integrity when they are wound in the constant torque mode. Thus, some form of tapered tension is used in most winding equipment today. The proper amount of taper in the tension profile for a particular product depends on many variables. The independent variables include:

- Desired winding speed
- Height and density of web surface asperity
- Elongation of the web at the selected winding tension at the roll beginning
- Thickness of standing gage bands
- Location of standing gage bands
- Final diameter of the production roll

Operator-controllable variables in the winding process are:

- Lay-on roller nipping pressure
- Lay-on roller diameter and hardness
- Starting tension
- Tension taper
- Winder speed

The amount of boundary air entrapment is much more a dependent variable of the described lay-on roller conditions than the web tension or tension taper.

The main objective of tension taper during the winding of any product is to preserve single-sheet quality of a web as it is wound into a roll to the largest desired diameter. However, the main objective of taper tension may fall short of its mark if it is not combined with programmed nipping pressure on the lay-on roller. To make the entire roll at or nearly the same quality as the outside one-third, where the wound web is flat and has an excellent quality appearance, requires more than tension taper alone. This is based on many combinations of tension-taper profiles on different products. Because of the different characteristics of web surfaces, such as the interlocking ability, coefficient of friction, stiffness, and caliper variation, there probably are as many different optimum combinations as there are films to wind. It is recommended that the taper be held constant at some value, a nominal value could be 20%, while the lay-on nip pressure is varied according to a predetermined curve to achieve the best wind. Figure 8.18 shows a suggested lay-on pressure-curve form. The curve of

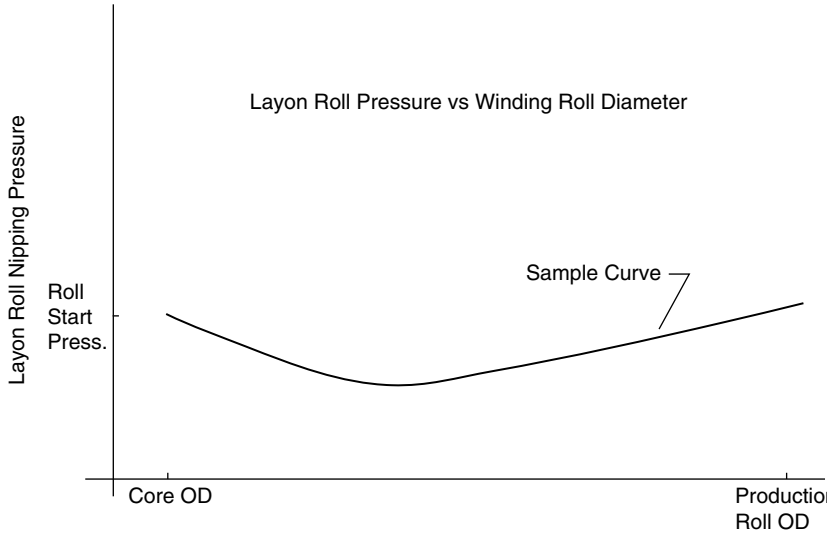

Figure 8.18 Suggested shape of lay-on roller pressure profile.

lay-on nipping pressure versus winding roll diameter is based on the amount of stack compression under the lay-on roller at different diameters in the winding roll. Core hardness limits stack compression of roll wraps at roll start. As the diameter builds, the wraps compress further because of the amount of boundary air that becomes entrapped and the accumulation of surface asperity for the wraps to deform around. More stack compression increases the wrap tension and the production roll becomes harder and more able to resist lay-on roller penetration. Also, as the roll diameter grows, the increase of wrap tension is reduced by lay-on roller penetration. This is because the ΔL (elongation of the outside wraps from the stack compression) is less a percentage of L (the length of the outside wrap on the winding roll) as the winding roll diameter gets larger. The suggested curve in Figure 8.18 attempts to keep the wrap tension from stack compression more uniform as the roll hardness changes during boundary air entrapment and wrap deformation around surface asperity.

Clear film issues

Webs with high asperity density and height are easy to wind, because surface asperity on a web reduces friction and provides interlocking ability. Also, high asperity protects the web surface from scratches and markings. Films that are very clear in appearance do not have a high surface asperity to diffuse light that passes through. Very clear films have very smooth surfaces. They are difficult to wind and are easily scratched or marked. But webs that have high asperity are hazy and/or exhibit lower clarity. Thus, asperity height and density reduces end-use value for clear film products, and other aids to assist in winding must be used on these products.

Sometimes, if there is enough surface asperity to interlock the web surfaces together, boundary air may be metered between the web wraps in a way that provides lubrication for slip and improves the quality of wind. This must be carefully done with surface texture on the lay-on roller. The amount and type of roller surface texturing needed is a function for how much lubricating air is needed for a specific film product. Also, web thickness is a variable in how well the air acts as a lubricant in the process. Thicker webs (because of their stiffness) tend to float on pockets of entrapped boundary air more readily than thin films. A knurled metal-surfaced lay-on roller is the recommended metering device. A fine-toothed knurl (21 teeth/in.) at a minimum depth of 0.007 in. after smoothing, in a diamond pattern works well. The smoothing cut after knurling is important in preventing any sharp edges running against the production roll during winding. The roller shell should be black anodized after smoothing because it improves roller life significantly.

Some special, very clear films have unusually high slip but are difficult to wind without artificially thickening the edges with knurls or other devices. This is because the asperity height is so low that it does not protect the web from developing slip pimples around contamination particles when the

wraps are compressed under a lay-on roller. Thickened edges support the lay-on roller and there is very little or no stack compression on most of the wrap width. The thickened edges also provide interlocking ability at the roll edges. In most cases some form of thickened edges is the only way production rolls can be made and transported with this material without experiencing telescoping.

While the knurled web edges make winding of this type of film possible, they also allow excessive boundary air entrapment between the winding wraps. The height of raised surface on each edge of a web is difficult to keep the same when using cold-formed knurls. Uneven knurl heights promote more boundary air entrapment on the side of the higher knurl. The amount of boundary air entrapment is somewhat reduced by compressing the knurls with the lay-on roller, but the improvement is miniscule at best. Production rolls that are lagged for any length of time form hard TD wrinkles as the excess boundary air leaks out of the rolls.

Hot-formed knurls may be regulated with much more accuracy than cold-formed knurls, but the problem of excessive boundary air still exists. But even when the web can be wound without winding defects and excessive boundary air entrapment, as demonstrated with the air lay-down device, there is not enough interlocking friction between the wraps to keep the roll from uncoiling after doffing. A suitable replacement for knurled edges for winding these special films has yet to be found.

Winding with edge knurls

The two most frequently used methods to thicken edges and provide some interlocking ability between the webs are the cold-formed knurl and the hot-formed knurl. Figure 8.19 shows knurling wheel teeth. Cold-formed knurl impressions are made in a web by pressing the small end flats of the knurling wheel against the web that is running over an elastomer-covered backup roller. Normally, the backup roller is driven at line speed during this oper-

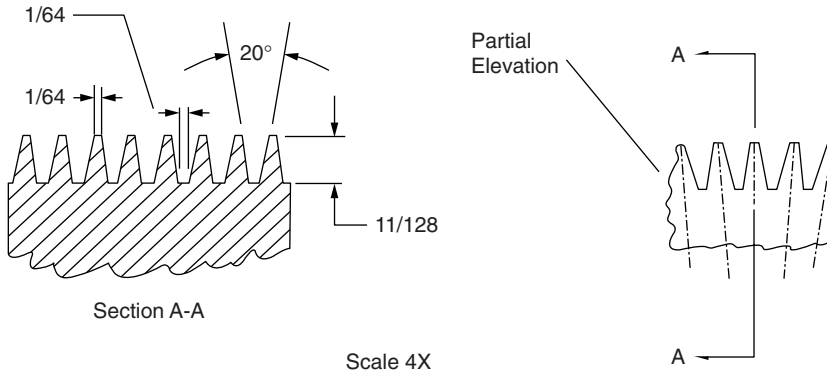

Figure 8.19 Cross-section of knurl-wheel teeth.

ation. The web under the end flat of each knurl point is elongated by the amount of deformation of the backup roller surface. Impressions left by the wheel effectively raise the web thickness in the area of the knurl track. There are many types of tooth patterns, with the number of rows ranging from one to eight, and each user claims that the pattern he is using has some special advantage for their product. Cold-formed knurls may be stack compressed by the lay-on roller during winding.

Hot-formed knurl impressions are made with about the same shape wheel and teeth, but the teeth are heated to soften the web. The wheel may be heated directly with an electrical cartridge heater element embedded in the wheel or the wheel may be heated with ambient air from a "cozy" type heater that covers most of the wheel surface. The knurl imprint forms when the web material is extruded from under the small end flats by the loading pressure on the wheel. Hot-knurls cannot be stack compressed because the web is actually thicker around the knurl impressions.

Increases in web thickness may be regulated with much more precision with hot-formed than with cold-formed knurls, because hot-formed knurls may be made against a metal backup roller while cold-formed knurls must be made against an elastomer-covered backup roller. The elastomer cover is abraded by the knurl teeth during cold-forming and a constant amount of web elongation under the end flats is very difficult to maintain for any length of time for any given set of conditions. Contamination is generated during the abrasion of the backup roller cover and may lead to slip-pimple generation in the production roll. However, the hot-knurling wheels must be well guarded to prevent operator burn injuries and polymer collection from melted web on the wheels.

Knurl-wheel pressure must be precisely controlled during any knurling operation. Keeping the raised height equal on each side is the biggest problem with both of these processes. A larger buildup on one side of the winding roll will create a tension gradient in the incoming web. This tension gradient may cause diagonal wrinkles to occur in the web as it is laid down on the production roll.

Very low lay-on roller pressure is required on thin gage rolls, (thickness $< 25\mu$) that are wound with cold-formed knurls. Overpressure will collapse the knurl deformation to where the wraps will experience stack compression and slip pimples can result. Under pressure will allow excessive boundary air between the wraps and TD wrinkle will show up quickly in the winding roll.

In most cases, winding quality is compromised on large-diameter production rolls of thin gage materials when wound at high speed if the edges must be knurled to keep the web on the rolls during the winding process.

Laminated web issues

One reason curl problems exist in laminated products is that the adhesive that binds the two webs together shrinks as it dries. Another reason may be

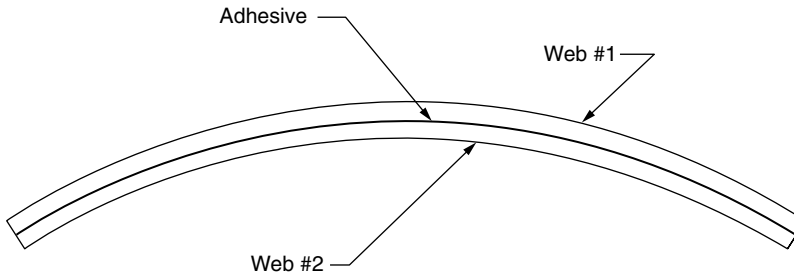

Figure 8.20 Curl during lamination of two webs.

that the two webs did not have the same MD elongation at the time the webs were fastened together in the laminating nip. A difference in planner elongation of the webs may be due to web tensions or thermal expansion differences. Figure 8.20 shows curl with two laminated webs. Two webs that are laminated together with an adhesive that shrinks as it cools will curl if the following relationship is not true:

$$(t^2)_{\text{web 1}} \times M_{\text{web 1}} = (t^2)_{\text{web 2}} \times M_{\text{web 2}} \tag{8.10}$$

where (t) = web thickness and M = web stress/strain modulus. (The web modulus may be very different between the MD and TD on products not oriented much in the TD.)

A load-cell roller is required on each web before the laminating step for elongation control. The amount of elongation of each web can be found if you know the modulus and the length of web between the tension isolation points. The amount of elongation is found from the following formula:

$$\Delta L = (L \times T)/(M \times t) \tag{8.11}$$

where

ΔL = amount of web elongation,
L = length of web between the laminating nip roller and the last tension-isolation point,
T = web tension,
(t) = web thickness.

When the webs must be different in thicknesses, the thinner web may have to be operated at a much higher tension than recommended for normal web handling to counter the TD bending forces of the thicker web. Both webs will bend toward the adhesive and the web with the greater stiffness will overcome the other web. Usually the less stiff web is the thinner one. Sometimes TD curl can be lessened by operating the thinner web at the limit of its elastic range, or just below the yield stress. The increased tension should be applied before the laminating nip and continued after until the adhesive

is set or cured. When the MD tension is finally relaxed, the TD forces stored in the thinner web assist its stiffness in resisting the bending forces of the thicker web.

The amount of narrowing may be calculated in most films by the following formula:

$$\Delta = -(R_p \times T)/((t) \times M) \tag{8.12}$$

where

Δ = difference between the web width before and after tension is applied,
R_p = Poisson's ratio (on PET, $R_p = 0.24$),
T = web tension in the MD,
(t) = web thickness,
M = stress/strain modulus.

Another variable affecting curl on laminated webs is laminator speed. The amount of dwell time that the film with the adhesive has on the hot roller affects the amount of curing and shrinkage of the adhesive. The less curing of the adhesive in the laminating step, the less curl there is in the final product. The negative side is that there will also be less peel or bond strength when there is less curing. The laminator speed is often limited by the desired bond strength of the laminated webs.

Melt extrusion onto webs of film or cloth also exhibit curl because the melt shrinks as it cools. The web experiences MD and TD thermal expansion as the hot melt is laid down on the web. The amount of thermal expansion is minimized by the heat transfer efficiency of the cooling drum surface and the thermal conductivity of the web. Sometimes the resin contraction during cooling and/or cross-linking is sufficient to cause the laminated structure to bow toward the resin. Curl from melt extrusion is illustrated in Figure 8.21.

There is less operator control of curl in melt extrusion lamination than with two-web lamination. Keeping the cooling drum as clean as possible helps keep curl to a minimum. Stiff webs offer some relief but melt contraction is fairly strong, and curl becomes a way of life for many melt-extruded products. Breaker bars are sometimes used on products that are not scratch sensitive. A breaker bar is a stationary web guide that has a very sharp

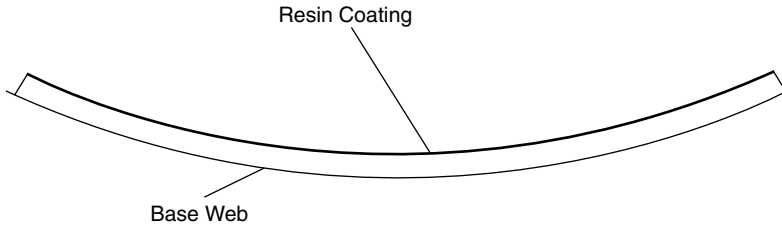

Figure 8.21 Curl during resin coating.

radius. The web is pulled (rubbed) over the sharp radius so the web bend shifts the neutral axis of the laminate closer to the resin and the web has more resistance to resin curl forces.

Web spreading during winding

The concept of using a small-diameter lay-on roller that is favorably bowed to spread the web as it is being laid down was introduced during the discussion of the lay-on roller above. As stated then, the small-diameter lay-on roller works well on rougher surfaces (Ra > 0.25μ) film webs but tends to exert excessive pressure on smoother web surfaces. Excessive pressure usually results in slip-pimple generation.

Another method of web spreading on the winding roll that has met with moderate success on certain high shrink films is the use of a normal-sized (5- to 6-in. diameter), nondriven bow roller without the backup roller. (See Figure 8.22.) This type of lay-on roller is usually configured in the ironing roller position. Production rolls must be wound very soft to benefit from the spreading action of the bowed lay-on roller, because the lay-on roller footprint must be wide enough in the tangential plane of the winding roll to accommodate the curve of the lay-on roller. The lay-on roller in this configuration can only be bowed in one plane. The amount of energy it takes to turn the bowed roller is provided by the outside wrap on the roll. This adds to the winding tension of the outside wraps. A soft covered roller (shore A durometer of 45) is best for the bowed lay-on roller.

The nipped lay-on roller as shown in Figure 8.10 is another method of web spreading close to lay-down. The backup roller has a smooth metal surface that allows the web to spread before it is nipped on the lay-on roller. Also, the nipped lay-on roller combination does not deflect as much under load because it is more stiff than a single roller. Lower deflection excludes boundary air more effectively during the winding process.

Issues with coated low-strength films

Many coating processes involve base webs that have low tensile strength with a low yield stress limit. Usually, the web is exposed to heat in the drying oven that may further lower the web yield stress. The level of web tension necessary to pull a low strength web through a coating machine is often high enough to cause permanent width loss in the web. Width loss results in thickened edges that cause production loss because they must be trimmed from the web before high-quality production rolls can be made routinely.

The yield stress values become important when determining the optimum operating tension levels in each zone of the machine. Operating at excessive tension levels on these webs impacts the winding quality of the wound rolls of the coated product. The break strength of one type of high-density 1 mil PE is about 3.5 lb/in. If the yield stress for PE is estimated at 52% of break strength, then the yield stress on 1 mil PE is

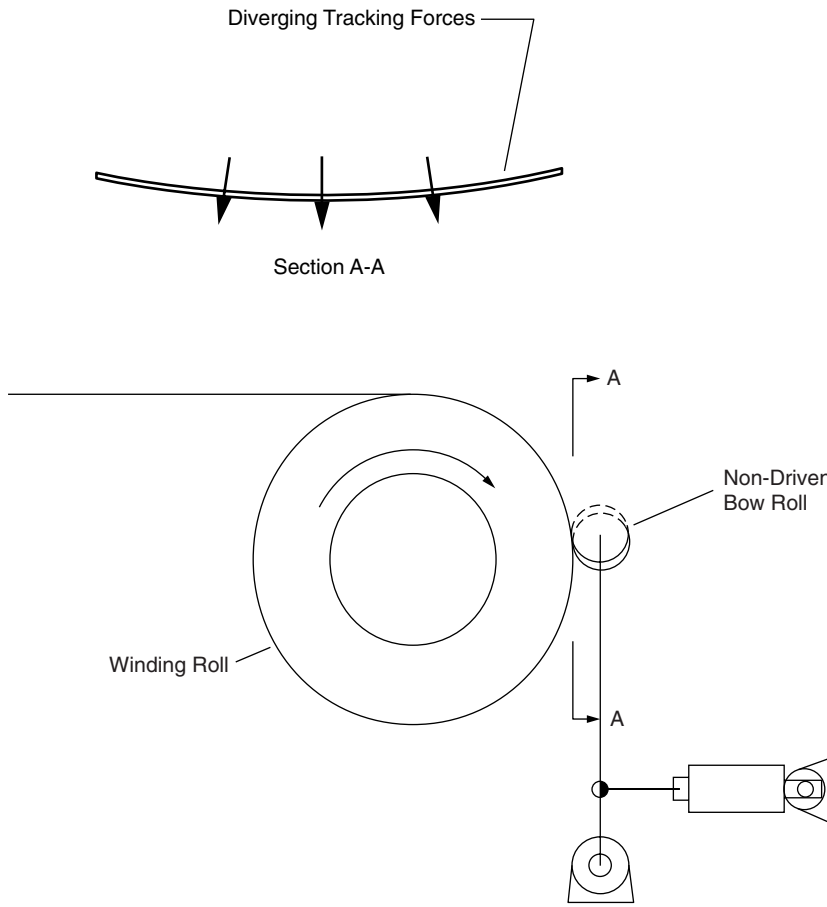

Figure 8.22 Bowed lay-on roller.

about 1.82 lb/in. This value is significantly lowered by increased ambient temperature. It is recommended that web tension in any machine zone be maintained at or below 10% of the yield stress to limit permanent web-width reduction in spans between tension-isolation stations. However, sometimes these low-strength webs must be operated at tension levels close to their yield stress limit to make the web track flat against the rollers through the machine. When this is the case, web-width loss is often present in the higher operating temperature zones in the drying oven because the yield stress limit has been reduced.

Web-width loss is further increased on these products when there are many nondriven rollers in the drying oven. All of the web-guide rollers in the drying oven should be tendency-driven to minimize width loss. Tendency-driven rollers are recommended in the drying oven because web width changes can result in tracking wrinkles on direct-driven rollers.

Web-width loss also occurs in flotation type ovens (ovens where the web is supported by air nozzles) when the spans are very long. This is because the opposing air columns of the nozzles create a serpentine thread path that puts MD tension in the web. Air velocity pressure from the nozzles must be carefully regulated to prevent adding excessive tension to low-strength webs that are operating at higher than ambient temperatures.

One major variable in drying ovens of any type is how the drying air is exhausted. Very uniform flow from the positive pressure nozzles is often negated by the arrangement and venting of the chambers in the exhaust nozzles. During the drying operation, flow patterns in the oven will set up according to the static pressure throughout the oven. If the exhaust nozzles are essentially long screened channels and vented to a duct at one end, air from the positive pressure nozzles will flow toward the ends of the exhaust ducts that has the lower static pressures. This is true for both sides of the web. A cross flow of drying air can set up differential temperature across the web and result in a skewed drying of the coating on the web. Skewed drying results in skewed shrink forces on the web surfaces that may promote wrinkles on guide rollers. Webs that are skewed because their surface coatings experienced skewed shrinkage are very difficult to wind into good large diameter production rolls.

The first plenums of the exhaust nozzles should be divided into an equal number of short plenums so the exhaust flows uniformly into the plenums along the entire length of the nozzle. Exhaust plenum construction in this fashion will prevent cross flows in the oven during operation. These short plenums are vented into longer plenums and then into one exhaust duct per exhaust return nozzle.

All exhaust nozzle ducts should be the same size diameter, the same number of elbows, and the same length when attaching to the same blower. Flow friction in the exhaust ducts can vary the flow in each duct to the blower. Also, the way the flows from these ducts are mixed at the blower entrance is important to prevent eddy flows from setting up and starving some of the ducts. A blower entrance transition piece that allows the flow from each duct to uniformly mix with the others before entering the blower can prevent the flow starving problems at the mouths of the nozzle return ducts. Figure 8.23 shows an example of a diffusing transition piece for multiple-duct entry to a blower. Another way to minimize the amount of web-width loss is to keep the span between tension-isolation stations short. Staged drying in multiple short ovens may aid the process. Vacuum belts may be installed between inline ovens to isolate tensions and provide speed control of the web between the ovens. A vacuum belt is an inline process that can be used to shorten a wet web span without having to turn the web as is necessary with tension-isolation vacuum rolls. However, vacuum belts require significant operating space (approximately 6 to 7 ft) between inline ovens. (See Figure 2.8.)

Air bars (sometimes called air rolls or turning rolls) are often used to turn wet webs at the end of the oven on multiple-pass machines. Air-turning

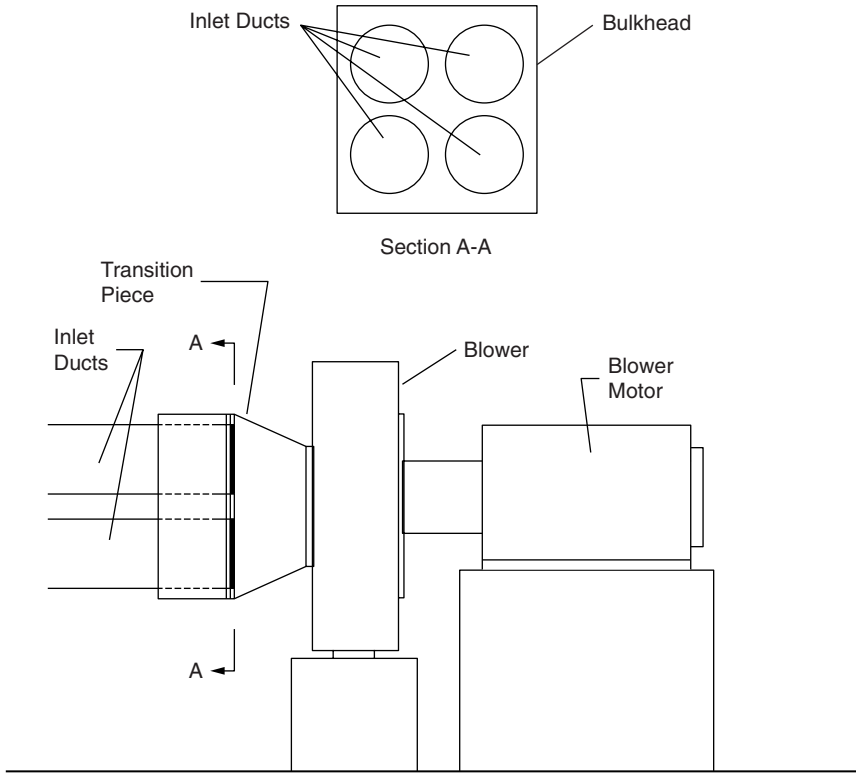

Figure 8.23 Mixing transition piece before blower.

bars frequently cause instability because of the amount of flow needed to keep the web away from the air bar surface. In theory, the pressure required to keep the web suspended was discussed in formula (13) Equation 2.5. Static pressure between the bar and web can be measured with flush radial openings in the bar located at the mid-wrap position. Tubes from these openings should be averaged in one plenum chamber before connecting to the pressure transducer. Figure 3.3 shows a device that can be used for a turning bar and offers good web stability.

Sometimes one or two rollers on the coating machine must touch the coating side after drying. When the coating is tacky, as is the case with adhesive coatings, the number of rollers that touch the coated surface should be minimized because the adhesive tends to cling to the roller surface, which creates greater tension on the web as it moves through the machine. One way to reduce web tension from adhesion cling is to install highly textured surfaces on all rollers that must touch the coated side. Texturing reduces the surface area in contact with the adhesive. Metal rollers with finely knurled surfaces work well in these applications. The knurled surfaces must be free of raised edges. The textured anodized aluminum roller discussed in Chapter 2 also works well with these products.

Coating thickness uniformity can be a significant problem during the winding of coated rolls. Standing gage bands are sometimes created in the coating/drying process that promote boundary air entrapment and result in poor roll formation. But some of the techniques that are available to noncoated webs, such as windup oscillation, are usually too costly for coated products, partly because the coating may not be recoverable or the machine width is limited, etc. However, randomizing the elements that cause the standing gage bands, thereby randomizing the standing gage bands, helps in the winding process. Lateral oscillation of the coating applicator, rod, die, or rolls might be one way to randomize coating gage bands and improve roll formation on the windups.

Web strength issues

Web-handling and winding difficulties are inversely proportional to web thickness. Strong webs, having a higher value bending modulus, behave more favorably in web-handling machines and during the winding process.

Very weak webs require very precise alignment of rollers and roller speed control in any converter machine. Very thin webs of stronger materials can be classified in the weak web category. Most rollers must be driven to prevent the web from "necking" in the spans between the rollers. Spans between the rollers must be kept as short as possible. Webs must be steered with a steering roller after any necessary long span. Weak webs are difficult to razor-slit without edge stretching or beading. Driven shear knives with proper setup are recommended for weak webs.

Winding problems are greater on weak webs because the webs lack stiffness, which aids boundary air removal during winding by providing passageways for entrapped air to escape (and/or equalize) between the wraps as the roll is winding. Very small pockets of entrapped boundary air between the wraps tend to be blocked by the weak web's ability to form around small air pockets or bubbles. These bubbles grow into larger ones on each succeeding wrap because of weak resistance to bubble pressure below. The bubbles are usually not round or symmetrical in shape, but they do seem to form in similar odd shapes, especially when they are between MD gage bands. Sometimes these bubbles can be made to disappear, sometimes for a short time and sometimes longer, during the winding process when the affected area is rubbed with a rounded end of an oscillating bar. The mechanism is not completely known, but it seems that in part the bubble air is spread over more area and the new wraps are not deformed from below, as was the case before the bubble air was spread.

As previously discussed, MD gage variation is more critical to winding defect-free rolls on weak webs than it is on stronger webs.

Speed issues

Optimum machine speed for every process can only be determined by production/cost evaluation. High machine speed usually tends to degrade

winding quality because of boundary air entrapment. In some processes, such as very wide web rolls from casting windups, this is not a major consideration because the rolls are quickly reslit into smaller web widths and length/diameter rolls before permanent defects occur. But web quality can degrade significantly more during lag time on rolls that are wound at high speed compared to rolls wound at slow speed on the same equipment. However, many processes that can have greater productivity by running at higher speeds are not because of tradition or fears of affecting yield. Sometimes these fears are well founded and based on previous experience when the higher processing speeds were attempted. But many processes do not run at their full potential because those who actually operate the machines do not understand what machine elements to adjust to achieve maximum processing speed.

This book is intended as a teaching guide to help those responsible for operating machines to run their machines at full potential, and reaching a machine's full potential sometimes requires modifying the machine. The explanations herein are intended to help the operators to more accurately identify those elements that may be modified for higher speed operation.

section three

chapter nine

Troubleshooting web-handling problems

Wrinkle problems

Web wrinkles may be the result of more than one problem. They may be coming from roller misalignment or web skew, or some combination of problems. The roller where the wrinkle is observed may not even be the one causing the problem. An easy approach to narrow the possibilities on most converter machines is to reverse the payoff direction of the supply roll on the machine. If the wrinkles change their angled direction toward the other end of the roller, then the problem is most likely base web skew. If the wrinkles remain in the same location and are similar to what they were before the supply roll direction change, then the following problem(s) may exist:

- Roller misalignment
- A web-treatment problem, such as nonuniform coating thickness
- A web distortion problem due to applied heat and/or nonuniform cooling transversely across the web

Base web skew and possible ways to correct it are discussed in Chapter 1. Skew specifications should be established when the web material is acquired. See the method outlined on page 10 to set up skew specifications. Also, Figure 1.7 shows how to measure skew for these specifications.

If the web is being skewed in your process, then those issues must be addressed before the problem can be permanently corrected. Corrections for web skew are discussed later in this chapter, but one quick method is to use the raised roll edges method outlined in Chapter 4. This method of staying on production should be thought of as only a temporary solution, and process development efforts should be intensified to find a more permanent solution to get rid of the wrinkles. The installation of concave surface rollers and/or bowed rollers in strategic places is an example of a

more permanent solution. There is a tendency to overuse bow rollers to compensate for badly skewed webs. Their use should be limited to only those places where nothing else will work as well. An example of such a place is just after the supply-roll payoff on a slitting machine supply-roll stand. Frequently, the payoff web is skewed as the supply-roll ages and changes shape. The bow roller can prevent web fold-over problems as the web moves into the machine for further processing. Web spreading after the bow roller is best done with concave rollers that have from 90 to 180° of wrap angle. No more than half of the rollers should be concave to prevent excessive tension on the web edges.

Roller alignment problems usually require machine outage to correct. Aligning the suspect roller with a pi tape and machinist level is a quick way to get back on production. This procedure is not as precise as optical alignment and should never be thought of as a permanent solution, but the procedure is as follows:

1. Choose a roller that is a main element of the machine, such as a driven metal nip roller used for tension isolation or a metal-surface cooling roller, and one that is close to the suspect roller. This roller will be your reference roller. Check it with the machinist level to make sure it is indeed level. There may be a few rollers in the thread path between the suspect roller and the reference roller. This will not be a problem as long as all of those rollers are level. Make each level by following Step 2 if necessary. Metal rollers are preferred as reference rollers because the pi tape method of determining the alignment in the plan view is more accurate when the roller surfaces are smooth and hard.
2. Check the level of the suspected roller. If it is not level, loosen one bearing block and make the roller level by moving (or shimming) the bearing vertically whichever way it needs to go to make it level. Tighten the bearing block securely.
3. Run the pi tape around one end of the suspect roller and the same end of the reference roller. Make sure the tape is not twisted. Also make sure that the tape is the same distance from the working-surface ends of the two rollers, i.e., make sure the tape loop is MD-aligned on the edge of the rollers.
4. Tighten the tape using a hand-held spring scale, and record the circumference of the tape loop plus the spring scale reading. Use the graduated scale markings on the tape to determine the loop circumference.
5. Move the tape to the other side of the two rollers and repeat Step 3. Use the same spring reading to tighten the tape. Record the circumference of the loop.
6. If there is a difference in the readings, loosen the roller bearing block again and move the roller in the horizontal plane until the loop circumference measurements are the same on both ends of the two

rolls. Check the roller level. Tighten the bearing block. Recheck the circumference of the loop at both ends again, using the spring scale reading from before. Don't be surprised if the circumference is different after the bearing block is tightened.

7. Loosen the block and repeat Step 6. It may take several attempts to get the pi tape numbers the same with a level roller after the bearing block has been loosened and then retightened.
8. Alignment can be made to about 0.001 in./ft with careful and diligent efforts using this method, and this is probably sufficient for many types of products that are thicker than 2 mils.

Sometimes there are many rollers that are not level and misaligned in the plan view of the machine. Roller locations may have been moved to provide for an alternative thread path and they were never properly aligned, or the rollers may have been replaced and the original bearing blocks were not properly pinned to the side frames. There are also occasions where the rollers have been skewed deliberately to make a skewed web run flat through the machine. Rollers that have been so skewed are seldom returned to their original and aligned position. Thus, skewing rollers to make one product run through the machine can often cause a flat web to wrinkle as it passes over the skewed rollers. Skewing rollers to make skewed webs run flat in the machine is not recommended, mostly for the previous reason. Other reasons are:

- There is a tendency for the number of misaligned rollers to quickly grow as time goes by when the practice of skewing rollers to make skewed webs run through the machine is followed. This can lead to having wrinkle problems with all webs (flat or skewed) that you try to run through your machine.
- Experience indicates that starting with an aligned machine and keeping it aligned by pinning all bearing blocks to the side frames is the best overall practice for long-term productivity. Roller replacement during maintenance takes less time and is much easier when the bearing blocks have been correctly pinned.
- It is easier to run a wide range of products, product thicknesses, and product quality when machine rollers are kept properly aligned. This also builds confidence in the machine's ability to operate correctly, and if/when there are wrinkle problems other sources can be quickly considered.

Web wrinkles between rollers often occur because there is excessive tension on the web. When skewed webs are being processed, excessive web tension can increase tracking friction of non-aligned resistance tension members to the point where the web will try to fold over on itself in long spans between rollers. Cast webs often exhibit excessive skew before they are stretched, and when they are put under high tension they may exhibit a tendency to fold over.

The first corrective action for this type of wrinkle problem on cast films, assuming there is no roller alignment problem, is to lower web tension as far as possible even though one side of the web may sag in the span. The minimum tension may be defined as that tension where the web will still track through the rollers to the next process without tracking off the intended thread path. The web span can droop a lot and still operate successfully if the web is going to be MD-stretched in the next process.

The second corrective action is to check the die and quench roller alignment. Dies must be changed periodically, and they sometimes become nonaligned through wear on the location dowels or lugs. A nonaligned die will produce a skewed cast web.

MD-type wrinkles can be formed on thin webs between rollers with excessive tension. These wrinkles are the result of web narrowing on the driving roller as the web's resistance tension members touch down. Tension causes these resistance members to align toward the web center as they touch down on the driving roller because the web is "necked-in" in the span between the rollers. The web narrows on the driving roller until the web's resistance tension members are again realigned in the MD.

Web-steering problems

Film webs subjected to heat in drying ovens, hot rollers, or other devices, usually need to be steered to keep them on the machine centerline because they tend to exhibit some skew after heating and cooling. Web-steering rollers are normally installed at the end of drying ovens to keep the web on the machine centerline. Unwind-stand lateral shifting is often used to keep the web that is paying off the supply roll centered in the machine.

Most steering problems are the result of either oversteering or understeering. Oversteering happens when there is excessive gain in the steering roller control circuit for the speed that the line is running. Excessive gain promotes overshoot, and the web travels off the machine centerline in the other direction, and this instability often throws in wrinkles in the web. Rotation of the steering roller axis in the plane of the web should be steady and correlated with web speed so that the web's resistance members can align themselves to the new set of tracking direction forces before new direction changes are encountered. Web speed through the machine usually determines how fast the steering roller response must be to keep the web stable and well centered.

Understeering lets the web move too far one way or the other before a steering correction is made. This problem may be the result of insufficient gain in the control circuit or it could be an incorrect placement of the edge sensor guide. The web edge sensor should be located about 6 to 10 in. after the steering roller on webs that run up to 1000 ft/min. There should not be another web-guide roller between the edge sensor and the steering roller. Understeering may also be the result of insufficient tracking friction on the steering roller. Steering rollers should have textured surfaces for

high-speed machines to prevent boundary air from floating the web on the roller surface and reducing the tracking friction. The knurled surface discussed for the concave roller in Chapter 5 works well for keeping the web in contact with the steering roller surface. However, the steering roller surface should be flat. Mini grooves cut lengthwise (TD) in the steering roller surface may be used in place of the knurled surface where the web is marked by the knurl grooves. Mini grooves should be about 0.005 in deep × 0.010 in wide. Lands between the grooves may vary between 0.050 and 0.125 in. Transverse mini grooves usually do not mark even the most delicate web surface.

All web-guide rollers that precede the steering roller in the zone to be guided should not be driven or have high contact friction with the web. These qualifications are necessary to allow the web to freely move/shift laterally as the steering roller changes its axis for web direction control. Also, the wrap angles on the preceding rollers should be less than 45°. There is always some lateral sliding on the guide roller surfaces when the steering roller changes direction of its tracking forces. Thus, tracking friction on all upstream guide rollers must be minimized to allow the web to be shifted toward the machine centerline without generating wrinkles during the shift of direction.

Pucker problems on laminated webs

Unequal planer expansion of webs before they are laminated together is one of the most common causes of pucker in laminates. Most laminating processes are designed such that the thermal expansion of the two web materials is very close to being equal. However, hardly any two materials have exactly the same coefficient of thermal expansion, so there is always some difference after the webs have cooled to room temperature. When one web is very stiff compared to the other, there is usually no pucker or buckle problem. However, when the two webs have similar stress/strain modulus numbers and are the same thickness but have different thermal expansion rates when they are cemented together or when only one web grows from some other source (such as hygroscopic expansion), the laminated structure is likely to pucker. Very small amounts of growth in one or the other web will cause visible buckles. Hygroscopic growth may occur after the webs have been laminated together. NYLON and PET films are examples of webs that experience significant hygroscopic growth when exposed to moisture. Polypropylene and polyethylene films have much less water absorption.

Pucker in laminates is caused when one of the webs either shrinks or grows more than the other after they are laminated together. The first step in solving the pucker problem is to make sure that both webs have the exact same growth/shrinkage in all directions before and after they are cemented together. Or, a very stiff web could be chosen for one and a pliable web for the other, but that might not meet product needs.

Scratch problems

Scratches are the result of relative motion between the web and its support surface. To correct this problem, first make sure that all roller surface and the web speeds are matched. Sometimes this is a difficult task because of the configuration of rollers in the machine. Measuring with a hand-held tachometer is a rough measurement and is usually not accurate enough to tell if there is a slight difference in speed between the surfaces. Strobe matching for visual (or camera matching for electronic monitoring) of inked (or printed) reference lines on the web to a spot on the roller surface can give very good resolution for detecting any speed variation. However, even with the best measuring devices, there are events that occur between the web and driven roller surfaces that promote scratches on very clear smooth webs. For example, a web that runs over a driven roller may exit the roller surface at a higher tension than when it first contacted that roller surface. Also, there exists an area on the wrapped surface that has different entrance and exit tensions. This area, called the creep zone, is where relative motion occurs. The web begins to elongate at the beginning of this zone as it experiences higher tension on the tight side. This elongation is sufficient to produce scratches in many smooth, clear products. Figure 9.1 illustrates this example and shows a braking type roller that is isolating tension between two zones. As more tension isolation is required of the roller, the creep zone becomes larger. Tension isolation will continue until the creep zone passes some point where the roller surface cannot exert any more braking force on the web, and the web will slip on the entire wrapped surface. The approximate amount of tension that can be isolated can be found by Equation 2.6.

The arc of creep zone surface can be kept small by keeping the amount of differential tension small around the wraps of all driven rollers. Several stages of tension isolation may be required to prevent scratches on very smooth clear films. According to Equation 2.7, larger diameter rollers do not help the scratch problem in the creep zone, but the equation doesn't say that larger diameters hurt either. Larger diameters are recommended to reduce the specific pressure between the web and the roller surface.

The previous discussion is relevant to metalizing machines, where the belt equation is fairly accurate in predicting the amount of tension isolation possible.

Equation 2.7, an extended belt equation, more fully describes the amount of tension isolation possible when the web is operating open to the atmosphere and over a vacuum roller. However, creep will still occur on the vacuum roller surface. Thus, when large tension changes are necessary, it is best to stage the isolator rollers to minimize the amount of isolation over one roller.

Nip roller isolators readily produce scratches on clear smooth films, especially crowned nip rollers. Scratches are due to two main causes: (1) there is a scrubbing effect of the elastomer as it deforms in the nip and

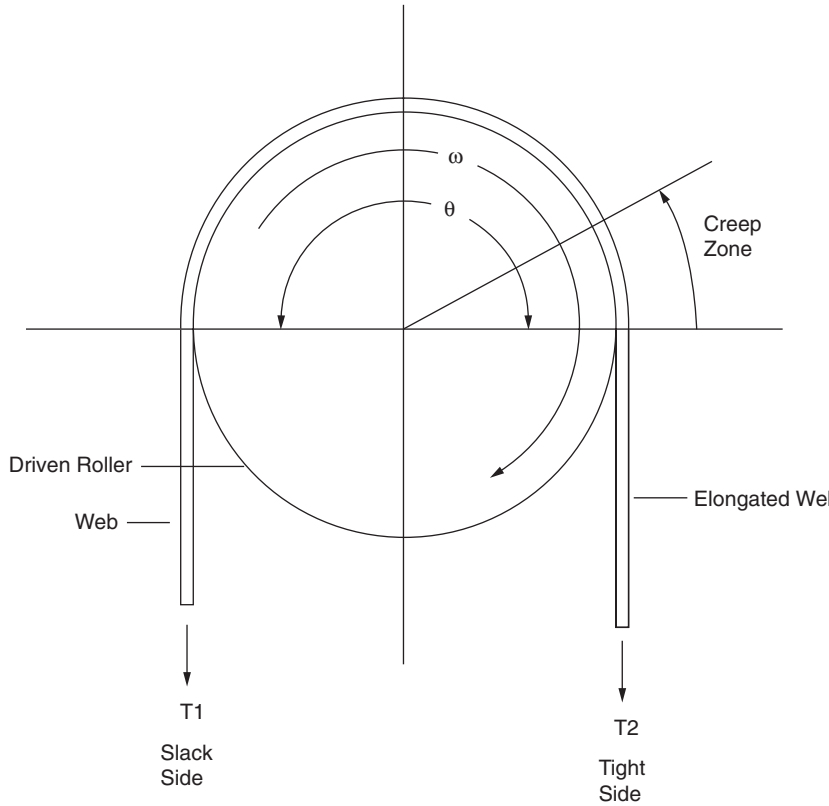

Figure 9.1 Creep in webs on higher tension side of rollers.

then returns to its original shape after deforming; and (2) the surface velocity of the elastomer-covered roller varies with distance from the center to the end of the roller. Nonuniform surface speed along the width of the elastomer-covered roller creates web scratches. Web scratches may be reduced by using the three-nip roller arrangement shown in Figure 2.4, if nip rollers are absolutely required for tension isolation. One of the components for making scratches is eliminated when a three-roller nipping system is used.

Elastomer-covered idler rollers that have surface areas of varying radii, sometimes caused from wear and sometimes deformed from operating speed, also make scratches in the clear smooth films. Textured metal surface (with rounded smooth knurl grooves) rollers with very flat profiles are recommended for these types of products.

Thermal expansion and cooling contraction of the web on roller surfaces also can promote scratches on clear smooth films. Large web temperature changes on one roller surface should be avoided. Several rollers should be used to heat and/or cool the web to reduce scratch propensity when large changes in web temperature are required.

Curl problems

Curl on laminated webs is usually the result of adhesive shrinkage as it dries and/or cross-links. When Equation 8.10 is not true, curl will develop in a laminated structure. TD curl may be minimized in some laminates consisting of different thickness webs (where the stress/strain modulus ratio is not equal to the ratio of the web thickness) by operating the thinnest web at maximum tension and the thicker web at minimum tension going into the laminating nip.

Sometimes the laminator speed can be used to reduce curl by reducing the amount of curing time of the adhesive on the hot roller. The amount of curl reduction is limited by the peel strength requirements of the product.

Curl problems in homogeneous webs are the result of one side having less surface area than the other. Unequal surface areas can be generated in the web-making process, especially in blown film processes, where there is curvature in the web as it is stretched and cooled. One surface may shrink slightly more than the other one because it is slightly warmer for a greater period of time. The general rule for thermoplastics is: *the side that stays hotter longer is shorter.*

Sometimes the curl is induced after the web is made. MD curl may be generated when the web is wound tightly on a small diameter core or run at high tension over small diameter rollers. Both TD and MD curl may be generated by heating and/or cooling only one side while the web is under tension.

Curl in homogeneous webs may be reduced or eliminated by equilibrating the surfaces in a relaxing device called a hot/cold roller web-relaxing machine. Some webs may be relaxed in an air suspended span in a heating/cooling oven when width loss is not a problem. Most webs should be restrained at the edges to prevent width loss during the relaxing process. The hot/cold roller device restrains the web on the rollers with electrostatic pinning or other means such as formed edges running in grooves. Also, the hot and cold rollers are located very close together so that there is minimal span in the web as it transfers from one roller to another. (See Figure 9.2.)

Web flatness problems

Web flatness can best be checked on a well-designed and constructed air cushion flatness table, a device that allows very thin webs to fully extend while being supported on a thin layer of low-pressure air. When the air cushion is removed, the web settles onto the table without any external forces applied to the web edges. The web rests in as flat a condition as its internal and surface stresses permit. When ripples, waves, or pucker are visible in the web on the table, that web is said to be nonflat.

Web flatness problems are characterized differently than curl problems, yet they share some of the same fundamental problem elements. Flatness

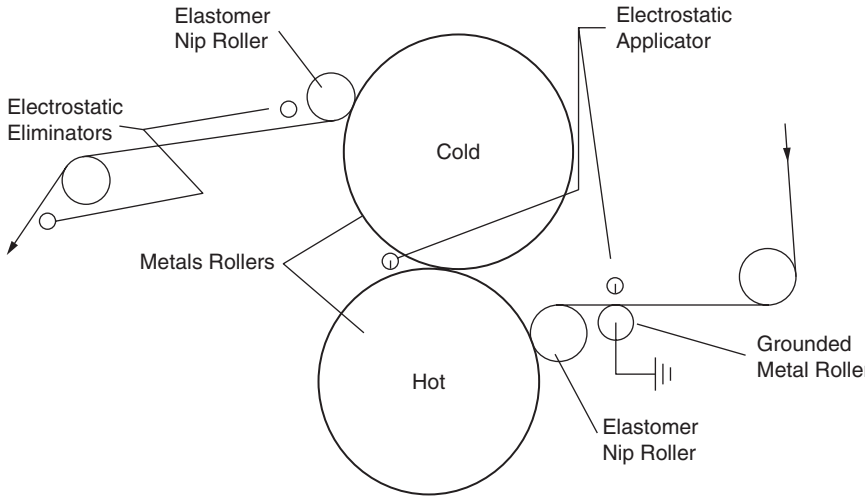

Figure 9.2 Plastic film-web-flattening device.

problems may be caused by matrix length/width differences (skew) in the same section of web. That web section may also contain surface-to-surface area differences (curl), as previously described. These problems may be very localized in small spots, or they may be randomly oriented in large areas of the web.

The approach to resolving some nonflat webs is much the same as it is for curl and skew. Nonflat webs that arrive as supply rolls in a converting site can be made flat by using a hot/cold roller device or the web-relaxing oven previously described before the converting operation. Or, the supplier may be motivated to improve the flatness of the supply rolls by adjusting the variables in the casting process.

A producer using a tenter-frame type film-web-making process must look farther than just the oven variables that affect dimensional stability to improve flatness. Particular attention must be paid to the annealing process. The proper toe-in of the tenter rails must be set in the annealing sections for any particular product and process speed. Material flow will not be uniform in all cross-sections of the web in the tenter-oven, because the web edges are restrained by edge clips while MD tension is exerted on the hot web from the tension isolation section at the end of the tenter-frame. The web is drawn in a bow-like profile and becomes thinner in the middle than at the edges. The casting die is adjusted to make the material thickness more uniform by increasing the amount of material in the middle of the web. While this action equalizes material flow rate, it does not prevent skew or different length tension members from developing at the tenter exit.

When the web is made at high speed in a tenter-frame process, the cooling nozzle flow in the annealing section must be profiled rather than uniform. Flat webs are produced when all "imaginary" MD and TD web

tension members in a particular cross-section of web are the same lengths in that cross section as it exits the tenter-frame. Profiling flow from the cooling nozzles to remove skew will help improve flatness of the web made in a tenter-frame casting machine.

Flatter film is more easily made in longer ovens because the web has more time to equilibrate with multiple annealing zones, and MD tension on the web is reduced on the hottest web sections because there is more edge clip restraint between the tension isolation section and the hottest web. Also, the zones may be better isolated from each other so that there is less temperature influence from one zone to another as the web tends to drag air from zone to zone through the oven. The flattest web is made when the web temperature is reduced to almost atmospheric temperature before releasing the edge restraints on the web.

Tin canning/MD wrinkles

The two main contributing parameters to MD wrinkles in rolls are:

- At least two persistent MD gage/caliper bands in the winding roll.
- The winder is equipped with a lay-on roller. (MD wrinkles have been reported in some short-draw winding processes.)

MD wrinkles form in rolls whether there is atmosphere present or not. However, MD wrinkle problems are temporarily masked by entrapped boundary air when rolls wound in the atmosphere.

Film webs with rough surfaces tend to wind with fewer MD wrinkles because some of the gage/caliper variation can be absorbed by the surface asperity. MD wrinkles are manifested in rolls of very smooth surface webs that have small percentage gage/caliper variation because the surface cannot absorb gage/caliper variation.

Lay-on roller cover hardness is only a parameter in MD wrinkle formation if the cover is very soft. Cover hardness of 45 durometer, shore A is an approximate lower limit for the lay-on roller. An upper limit to lay-on cover hardness has not been found. Very soft covers tend to stretch the web over gage bands and exacerbate MD wrinkles between the gage bands.

An MD wrinkle theory

The web matrix in the gage band areas carry higher tension (PLI) and supply greater radial pressure toward the core than the other areas of the web. They also bear much of the lay-on roller contact loading. These areas are essentially locked into position on the winding core by compression pressure. They are also traveling at a higher surface speed because their radius is slightly larger than the rest of the web. Deformation of the lay-on roller cover plus the higher MD tension that occurs in the gage band areas tends to stretch the web in the TD over the gage bands as shown in Figure 9.3. TD stretching

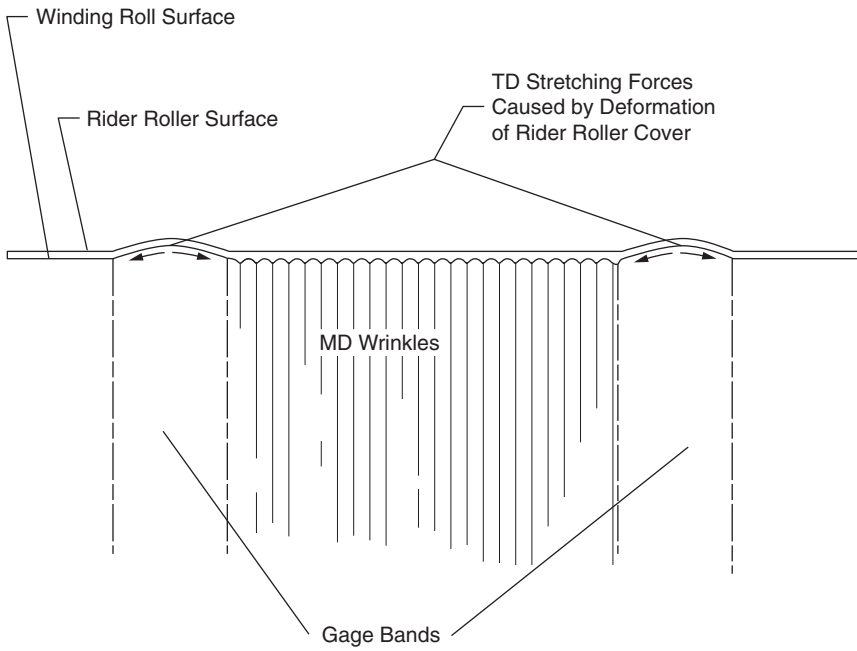

Figure 9.3 MD wrinkle/tin canning origin theory.

over the gage bands results in a greater web width between the bands than is necessary to span the distance. The web collapses into the undulating MD wrinkle pattern between the bands in compression failure, and because there is also MD tension on the web matrix between the gage bands, the web experiences additional compression failure due to neck-in forces in the elongated web.

When rolls are wound in the atmosphere, the greater quantity of entrapped boundary air between the gage bands masks the formation of MD wrinkles by forming a spiral chamber of entrapped boundary air that keeps the roll surface looking smooth. MD wrinkles appear as the entrapped boundary air is forced slowly out the roll ends by the compressive pressure of the wound wraps.

Options for reducing MD wrinkles in winding rolls are as follows:

- A producer should reduce the magnitude of persistent MD gage bands and randomize the persistent gage bands with windup oscillation. Optimum amount of traverse during windup oscillation is related to the distance between the persistent gage bands. The optimum period or stroke length for winder transverse travel is $^3/_4$ the average distance between peaks of the persistent bands. Very little is gained when less than $^1/_2$ the average distance is used. Generally, a transverse oscillation speed of $1\,^1/_2$ in/min is sufficient for casting

machine windup oscillation on a film thickness from 1 to 350 μm. This oscillation speed is acceptable for line speeds up to 1100 ft./min.

- Maintain a decreasing web tension profile on the winding roll. Usually, the tension decrease is from 20 to 30% taper tension. The optimum taper depends on the film properties and its surface.
- Spread the web in the TD with the lay-on roller nip. When the web surface can withstand moderate to high loading pressure (1 to 2.5 PLI), a flexible bowed pressure roller may be used. This device has excellent web spreading ability at very high speeds. However, the film surface must be fairly rough (Ra about 0.250 μm) or slip pimples will develop. Spreading the web applies TD tension on the web and prevents excess web from being pulled into the valleys between the persistent gage bands. TD tension applied to the web as it is laid down prevents the MD wrinkles from forming as the boundary air leaks from between the wraps and the wound roll diameter decreases.
- When the web surface is very smooth and cannot withstand moderate to high contact pressure, a slightly bowed lay-on roller may be used. The cover for this roller must be near the lower limit of hardness (45 durometer shore A) for the spreading to be effective on the web. The softer cover on the bowed roller provides a footprint that is wide enough to keep contact with the winding roll across its full width.
- The supplier should work with the producer to randomize the persistent gage bands in the winding roll. This can be done with windup oscillation on the producer's mill roll windup as previously indicated.
- Generally, do not try to randomize by oscillating the unwind stand on the converting machine, because there is usually insufficient supply roll width to make a significant difference in the buildup of the gage bands in the winding roll and there is a possibility that you can create trim breaks at the slitter when the trim becomes very narrow.
- Minimize the gage band buildup by either making shorter length rolls or using larger cores. While larger diameter cores and shorter length rolls help producers reduce MD wrinkles, they are not the solutions that are desired by the converters because they increase the converting machine downtime with more frequent supply-roll changes.

TD wrinkles

These wrinkles are usually caused by excessive boundary air entrapment. Sometimes this is because the winding process does not have an adequate lay-on roller, or gap winding is being used, and sometimes TD wrinkles are the result of excessive core diameter shrinkage such as when the core fails roll buildup.

Options for resolving TD wrinkles are:

- Install an appropriate lay-on roller that is capable of removing the excess boundary air at your desired operating speed without generating slip pimples. Guidelines for lay-on roller design are found in Chapter 8.
- Use cores with enough compressive strength to resist the radial inward forces of the wound wraps. Guidelines for cores and mandrels are also found in Chapter 8.

Slip pimples

Slip pimples are the result of surface-to-surface adherence between clear, smooth web wraps that often happens in the nip of a lay-on roller. Sometimes contamination on the web exacerbates the surface to surface adhesion. Slip-pimple formation is discussed thoroughly in Chapter 8.

Options for solving slip pimple problems during winding are:

- A producer should minimize slitter debris, as discussed in Chapter 7.
- A converter should remove all debris, especially slitter debris, from the web before winding. Neutralize static charge before attempting to clean web.
- Reduce stack compression of the winding wraps. Use minimum lay-on roller contact pressure. Use minimum cover hardness (about 45 shore A durometer) where product permits.
- Wind with a decreasing tension taper, using a range from 20 to 30%.
- Program the lay-on roller pressure to keep stack compression at a minimum and uniform as the winding roll builds. A sample of the roller pressure curve shape with winding roll buildup is outlined in Chapter 8.
- Provide additional lubrication by way of metered boundary air between the wraps to facilitate surface-to-surface slip in the lay-on roller nip. This can be done using a textured surface lay-on roller as discussed in Chapter 8.

Snail trails and other defects

There are many winding defects that are known by local signature names. They primarily appear in webs that easily deform around entrapped air bubbles. These defects may take many shapes, depending on the product that is being wound and the variables at their point of origin. They are usually located in partial MD bands or they extend completely around the winding roll, often between gage bands. Most of these defects are pockets of entrapped boundary air that has formed shapes that present the least resistance to the compressive forces of the web wraps as the lay-on roller passes over them. Sometimes the lay-on roller surface is worn

or grooved, and excess boundary air is ingested between the wraps in those areas, but most of the time gage bands are the basic problem. The strange formations of bubbles of entrapped air usually continue to grow as the winding roll builds.

Options for eliminating these types of defects are:

- A producer should work to improve gage variation; a coating converter should work to improve coating thickness uniformity.
- Use a very smooth, hard (72 to 75 shore A durometer) surface cover on the lay-on roller to eliminate boundary air. Roller surface should be Ra < 50 μm. Change roller frequently to prevent problems with wear. Smooth metal surfaces also work well for these types of defects.
- Program the lay-on roller to keep penetration (stack compression) of the winding wraps at a minimum and uniform throughout the entire roll buildup.
- If deemed economical, these defects can be removed by running the web through hot/cold rollers as described earlier in this chapter.

Static management

Static electricity must always be addressed when handling nonconductive plastic webs. This topic was thoroughly discussed in Chapter 6. Options for dealing with static are:

- Install new or upgrade old static removal equipment to be compatible with current process speed and the materials being processed. There are some devices on the market that do an excellent job of removing static from webs, as well as some that claim greater performance than they exhibit. When purchasing new equipment, ask for a demonstration on your own webs at your process speeds. Good equipment should lower static below 1kV at 1000 ft/in.
- Remove static from both sides of the web. The removal device should be located near the web and about 2 ½ in. from the last roller surface it touched. Many static removal stations may be necessary in a long thread path because each roller may contribute to the level of static on the web.
- Keep the web tension at a minimum because creep on the high-tension side of the roller may generate static.
- If using grounded tinsel or static string, support these conductors so that the removal devices do not touch the web. Make sure the devices effectively cover the transversely spanned web.
- Keep relative humidity about 45% in the web processing areas.

Glossary

There are many different words used to describe similar things in the converter industry. This section presents definitions and interpretations of words and terms used in the web-handling industry to describe events, equipment, defects, etc.

Air Entrapment The capturing of boundary air between web wraps during the winding process. There is always some boundary air entrapped when a web is wound in the open atmosphere.

Alignment The process of making the axis of all the rollers in a machine parallel to one reference roller in elevation and plan views.

Asperity The roughness of the web surface, usually expressed in microns (one micron is one millionth of a meter) or micro inches (one micro inch is one millionth of an inch). Webs with high asperity wind well, webs with low asperity are more difficult to wind.

Baggy Edges A condition of the web brought about by longer web "resistant tension member" lengths on the edges than in the middle of any span.

Boundary Air Atmospheric air that clings to the boundary surfaces of all materials, moving or non-moving, until it is displaced.

Bowed Roller A roller that has a curved axis. The roller covering is flexible and stretches during one half of a revolution and compresses during the other half. This type of roller is more difficult to turn than a straight roller because the energy required to compress and stretch the covering during each revolution must be supplied by the driving force. The maximum wrap angle on a bowed roller is 90°. The web should approach the roller surface on the concave plane and leave on the convex plane. These rollers should be driven when they are working on delicate low-strength webs.

Caliper Variation Thickness variation in the web. The variations may be orientated in the TD and/or the MD. If the variation is orientated in the MD, bands of web with greater thickness will build up at a faster rate on the winding roll than the balance of the roll where the thickness is

more constant. When the web has MD-orientated thickness variation, it is generally referred to as exhibiting undesirable TD gage. If the gage orientation is in the TD, the web is said to exhibit undesirable MD gage. TD-oriented gage variation does not affect roll formation because the thicker areas are randomized as the roll builds.

Chicken Tracks, Snail Trails, etc. Web defects that are seen in a winding roll or that develop after the roll is doffed. These defects are usually the result of bubbles of entrapped boundary air. The odd shapes are formed when the web yields around the bubbles of air in the pocket areas. Sometimes the wrinkles will orient themselves along the lines of forces produced by non-uniform web tensions in that area of the roll.

Core Strength The capability of the core to withstand the radial compression pressure of web wraps that are wound under tension. Core strength is a very important variable in winding extensible webs.

Conductor Any material that is capable of carrying electrical current. Conducting materials offer resistance to current flow according to the specific electrical conducting properties of the material. Highly resistive materials allow small current to flow for a given amount of voltage potential. Low-resistive materials allow larger current flow for the same voltage potential.

Contact Roller (normally called Rider or Lay-On Roller) A roller used to limit the amount of boundary air that is entrapped in the winding roll. This roller is also used to tighten the wraps on the winding roll. The roller may be stationary in the machine frame while the winding roll pivots away to accommodate buildup, or it may pivot into the winding roll when the winding roll axis is stationary.

Constant Tension Web tension does not change as the roll builds from core to full roll diameter when winding in this mode. Sometimes excessive radial pressure builds in a roll and crushes the core. This happens most often when thin extensible webs are wound into large diameter rolls at constant tension.

Constant Torque Web tension reduces as the roll diameter builds from core to full roll diameter when winding in this mode. Sometimes the outside wraps become loose and telescope before the required footage is wound on the roll. This mode is also known as constant current winding.

Counterbalance Pressure The working fluid pressure (air or hydraulic) that is used to offset the gravity force acting on a dancer roller, nip roller, or contact roller. If the rollers are mounted on pivot arms and the operating position changes during operation, the counterbalance pressure must be programmed to maintain a constant amount of counter torque on the above rollers.

Creases Web folds that are ironed into the web. Many times these defects occur when high web tension is put on a skewed web. These are permanent web defects.

Dancer Roller A roller (usually mounted near the unwind stand) that changes its operating position when the web tension increases or decreases. When the operating position is different than the running position, pressure changes are made to the payoff roll brake in a direction (more or less) to restore the roller to its running position. The amount of fluid pressure that is applied to the dancer roller swing arm actuators determines the amount of web tension that is applied to the payoff web. Keeping the running position constant keeps the payoff tension constant. Sometimes dancer rollers are used to control the windup tension. When the dancer roller is used to control windup tension, another winding roll diameter sensing feedback signal must be sent to the dancer actuator pressure control panel to profile the actuator pressure with roll buildup according to the desired tension taper curve. The greatest asset of the dancer roller is the ability to store or give up thread-path length while keeping the web at about the same tension.

Dead-Band An area of a sensor pickup head where the feedback signals from the sensing elements do not change the signal that it is supplying to the control panel. Edge sensors equipped with dead-bands result in a more stable edge guiding system than those without because they do not react to web edge flutter or other small deviations. Dead-band zone width does not affect machine response time as is the case when gain control is used to stabilize the sensor. Dead-band zone width is usually adjustable to suit product needs.

Deflection The amount of bending that occurs when force is applied to a roller surface or other element of the machine. Usually, the term is used to describe the maximum amount of deflection in a machine element under a particular load, such as the amount of bending a mandrel undergoes as a full length roll is wound on it.

Dielectric A material that does not conduct an electrical current through its matrix. However, these materials usually will exchange surface electrons with other surfaces (both conductors and non-conductors) quite easily. The surface of these materials is capable of storing significant electrostatic charge. The surfaces must be discharged by an external source, either by ionization of the atmosphere or by a conducting atmosphere to bring the surface to neutral charge.

Driven Rollers Rollers that are driven by either the main machine drive system or by an auxiliary drive motor. Rollers that are driven by surface contact only are not considered to be driven rollers.

Eccentricity The out-of-roundness of a roller, wound roll, core, or mandrel, usually expressed as TIR (total indicated run-out) in mils. Points on the surface of an out-of-round roller do not rotate on the same axial circle. Eccentricity causes fluctuations in web tensions, especially on the payoff roll. Dancer rollers tend to reduce web tension fluctuations due to payoff roll eccentricity.

Edge Sensor A device is used to monitor the web edge. It signals the steering control system to move the web back to the machine centerline.

Elastic Limit The point during the elongation of a web where it will not return to the original length when tension is removed. Permanent deformation occurs in the web when the elastic limit has been reached or exceeded.

Elastomer A material that behaves like rubber but is made from synthetic polymers and may be superior to rubber in several mechanical or chemical properties. Elastomeric roller covers can be custom made to meet specific chemical and thermal properties that are beyond the ability of natural rubber.

Electrostatic Charge Electrical charges that are trapped on the film web surface. The charges may be either positive or negative. Electrostatic charges collect on a dielectric surface through the exchange of surface electrons. This electron exchange occurs whether the adjacent material is conducting or nonconducting. Thus, charges may build up on a nonconducting web by running it over a roller or stationary guide.

Encoder A device that measures and signals a control system as to how far the subject part has moved relative to a reference point. It can measure the pivot rotation of roller arms, linear position of a slide component, or the rotation degrees of a roller. One of the more significant features of this device is its ability to signal the location of the component it is measuring in very short time and distance intervals. For example, rotary encoders can signal a roller position several thousand times per revolution. This device has been one of the most important elements responsible for the great improvements in precision speed control for motor drive systems.

Feedback A signal used in control logic to tell the control system whether to act on the process it is controlling. Feedback requires a sensor to generate a signal to affect control. Usually the sensor is used to monitor a process parameter that is most sensitive to change when expected process changes occur.

Field Strength The amount of electrical force generated between charges on film webs or on a film web and another body that has or can be made to have an unlike charge. There are two variables that define field strength. One variable is the field intensity. It varies directly with the magnitude of charge. The second variable is distance between fields. The strength varies inversely with the square of the distance between the charges. There are also two types of electric fields, the uniform and nonuniform fields. In a nonuniform field the electrical lines of force converge to a point from a plane, while in the uniform field the electrical lines of force are perpendicular to and between two parallel planes. The field becomes much more intense (concentrated lines of force) near the point in the nonuniform field. Ions are made from the air molecules when

the field becomes intense enough to remove or add electrons from those molecules. During times when very high rates of electron exchange are occurring, there is a high probability of electron collisions with air molecules. These collisions may produce other free electrons that may produce more ions, etc. When the field intensity is high enough, there is a chance that the atmosphere will break down and a spark or conductive path to ground will occur, and the field will discharge in an arc. Electric arcs occur more easily at the same voltage between electrodes in non-uniform fields than uniform ones.

Flash Wrinkles Fold-over wrinkles in the web that come and go quickly. Usually the faster the machine speed, the quicker the wrinkles appear and disappear. When these wrinkles are present, the non-aligned tracking and resistance forces are starting to overcome the web stiffness and the web folds to release the lateral component of these non-aligned forces. After these forces are released, the web stiffness gains control of web tracking and the web stays flat until the next lateral force buildup.

Fold-Over Wrinkles Wrinkles in the web that stay in the fold-over position for a long duration in the process, even to the winding roll. When this type of wrinkle is present, the tracking and resistance forces are so badly nonaligned in that area that web stiffness cannot regain control to make the web run flat. There are usually two possible causes for this type of wrinkle. One is non-alignment of rollers. The other is a badly skewed web.

Gage A common name for web thickness variation. Sometimes the thickness variation is referred to as caliper variation. This term is commonly accepted as thickness variation across the width of the web or TD gage. The other gage variation is usually called out as MD gage variation or thickness variation along the length of the web.

Idler Rollers Rollers that are driven only by the surface friction from the web. These rollers should have low rotational inertia and very low friction bearings.

Ions Molecules of any material that possess an external electrical charge force. The material has either gained an electron (negative charge) or lost one (positive charge). Air is composed of gases that can be ionized with a strong electric field. Ionized gases carry current from one electrode to another when an electric field is present between the electrodes.

Lateral Shifting The sidewise movement of the web as it moves through the machine or onto a winding roll. If the web shifting movement is not automatically corrected the web may continue to track off the centerline until process problems develop. Lateral shifting often takes place when speed changes are made to the machine. The web usually stabilizes in a new location when the speed stabilizes at the new level. Lateral shifting may also occur due to nonuniform

drying rate (from nonuniform shrinking forces) of a coating that has been applied to the surface. Lateral shifting is also used to describe movement of unwind and windup stands when using an edge sensor to keep the web on the machine centerline or the web centered on the winding roll.

Layon Roller (sometimes referred to as Rider Roller) The roller that is used to wind film is often referred to as a lay-on roller. Usually, this roll is pivoted into contact with the winding roll and is used to limit the amount of boundary air that is entrapped in the winding roll. Some lay-on roller pivot assemblies are mounted on horizontal linear slide frames that move by a servo type mechanism as the winding roll diameter increases. This movement allows the lay-on roller contact to remain in nearly the same location on the winding roll. The lay-on roller is also used to tighten the wraps on the winding roll, and in some cases, it is used to spread the web during lay-down.

Load-Cell Roller A roller that has strain-gage type sensors, either in the roll trunnions or in the bearing mounts, to measure the web tension. The sensors send a signal that compares the web tension with a reference tension in the process controller. Signals from each end of the load-cell roller are normally combined in the control panel before the signal is compared with the reference signal. When there is a difference, the controlling program will activate whatever it is controlling to make the roller sensor signal and reference match (null).

MD Wrinkles Web wrinkles that resemble the wall strengthening undulating bends in tin cans. They may be seen in web spans or in the surface of a wound roll. They are usually formed under the outside wraps of the winding roll and become visible after some of the entrapped boundary air has bled out of the roll edges. Compression of the wound wraps forces the entrapped boundary air to move between the wraps surface asperity to lower pressure at the roll edges. Thus, these wrinkles often appear after doffing during lag storage on formerly smooth roll surfaces as the entrapped boundary air slowly escapes to the atmosphere. MD wrinkles normally form when a lay-on roller is used and the web has at least two standing gage bands.

Modulus of Elasticity The ratio of the amount of stress to the amount of strain (or load to stretch) in the elastic region. It is the amount of force pulling on a unit of cross- sectional area of the web material divided by the amount of elongation of a unit length of the material. This number is very helpful in calculating the amount of tension to put on a web in any zone in a converting machine to prevent permanent deformation of the web.

Nip Rollers A set of two or more rollers that are pressed together (nipped) and used to generate or isolate tension on a web in the thread path of a machine. Sometimes they are used to simply pull the web

through the machine, and other times these rollers are used to isolate web tension in different zones in the machine. One of these rollers should have an elastomer cover and the other should have a metal surface. Normally, the metal roller has a flat surface and the elastomer-covered roller is crowned so that a uniform footprint can be achieved across the full width of the nip during operation. There are many limitations when using nip rollers that the converter should understand. Please read about nip rollers in Chapter 2.

Neck-In The amount of width reduction that occurs in the film web when that web is under tension as it runs through the machine. Permanent width reduction occurs when the tension exceeds the yield strength of the web material. Permanent web distortion distorts the web thickness profile by making the web near the edges thicker than the balance of the web. Thicker edges lead to winding problems as the thicker edges build diameter faster than the rest of the web. Web tension must be carefully monitored in any machine zone where the temperature reduces the yield strength of the web material because permanent web neck-in can and will occur when the yield stress limit is exceeded.

Parallel Roller Axis The condition of each roller where it is axially aligned parallel to a reference roller in two planes (usually elevation and plan views) so that the web will lay flat on each roller surface as it passes through the machine. The rollers are aligned so that a web may be pulled under uniform tension across its width as it moves through the machine. Parallel roller axis alignment is paramount for optimum operation of any converting machine.

Permanent Deformation The condition of a web area that has been stretched beyond its elastic limit and remains deformed after the web tension has been removed. This may occur in very small areas as well as large areas of the web. Example of small areas are slip pimples; large areas may be web neck-in previously described.

Roller Profiles Possible shapes of a web-guide roller surface. There are two surface profiles that are acceptable for web handling. These are the straight cylinder and the concave surface. The crowned roller is a special case involving nip rollers where the crowned roller surface is designed to conform to the deflection of the straight cylinder roller under the nipping load. Crowned rollers should never be used as guide rollers.

Run-Out The axial turning eccentricity along a roller surface. When a roller exhibits run-out, all points on the roller surface do not rotate in the same axial circle as the roller rotates. TIR (total indicated run-out) is the maximum value of eccentricity measured when the measuring instrument is traversed the entire length of the working surface of the roller. Run-out is present in all turning rollers to some degree. Acceptable levels of run-out depend on the particular process that is running on the machine.

"S" Wrapped Rollers Usually installed as a pair of rollers in the thread path where each roller is wrapped 180° by the web. Sometimes several pairs of these rollers are clustered to enhance their tension–isolation capability. The surface of these rollers must be able to absorb a significant amount of boundary air to be effective tension isolators.

Shaft-Less Unwind Stand Basic pieces of converter machinery that hold the supply roll. Unwind stands that are normally equipped with one air-operated sliding and one fixed chuck. Rolls that are to be unwound must be mounted on a mandrel that is then chucked in the stand. The chuck mating faces are normally cone shaped. This is to ensure that the mandrel end rings are centered when chucked in place. The two very important properties that an acceptable shaft-less unwind stand must possess are the ability to hold the mandrel concentric at high-speed operation and the ability to absorb vibration from eccentric payoff rolls. Optimum unwind stands are very rigid with precision sliding parts.

Stable Running Web A web that can be made to track through the machine on the desired thread path centerline at the desired web tension and at the desired process speed in a flat profile.

Stack Compression The compression of wraps on a winding roll when a lay-on roller is used to limit the amount of boundary air entrapment. Stack compression is made possible by two nonrelated phenomena. One is the height and density of the asperity on the web surface, and the other is the amount of entrapped boundary air between the wraps in the roll. Surface asperity promotes limited stack compression by permitting the wraps to deform around them under pressure. This deformation allows the neutral axis of the wraps under compression to be closer together than when they are not under the nip of the lay-on roller. The entrapped boundary air between the wraps is displaced under pressure from the lay-on roller nip. One asset of stack compression is that it reduces the difference in buildup diameter between thicker and thinner areas of the web.

Static Charge Reduction The process of removing electrostatic charge from the web surface. This may be done electrically by producing clouds of positive and negative ions with an electrical powered source close to the web. Static charges can also be reduced by use of the electric fields on the web to ionize the air around very small diameter grounded points that are suspended very close to but not touching the web surface. Normally, the charges found on a web are single polar charges that can be measured with a static meter. These charges are also known as "tri-bo-electric charges." The charges may be positive or negative, and these charges can be very intertwined. Electrostatic charges cannot be conducted off a web with a metal surface roller. The exchange of surface electrons be-

tween the roller surface and the web often leaves more static on the web than before it went over the roller. The web surface must be covered with ionized atmosphere or fluid to neutralize the electrostatic charges. Grounded very fine points are acceptable for slow processes, but powered ion producers are required for high-speed operations. Frequencies of 50 to 60 Hz are acceptable for powered sources at web speeds up to 1000 ft/min. Radio frequencies are required for best performance of powered sources above 1000 ft/min.

Speed Control A type of electric motor control that uses an armature rotation encoder feedback signal to change the motor current to keep the motor rpm at the desired set point regardless of the load that is applied to the motor. Modern controls are able to maintain motor speed to less than 0.001% of set point.

Steering Rollers Rollers that pivot in the plane of the film web so that the web will track toward the machine centerline. Web steering may be done with one roller, a pair of rollers, or a nest of four rollers (two of which pivot on a table while the other two are stationary). Each type of steering unit requires at least one edge guide to provide a feedback signal to the actuator control panel. Steering rollers should not rotate quickly and they must be stable in movement. Their surfaces must have good tracking friction with the web.

Strain The amount of elongation (stretch) that a web undergoes when tension is applied. Most materials undergo elongation when put under load. Elastic materials will return to the original length when the load is removed provided the elastic limit has not been exceeded.

Stress The amount of tension applied to the web divided by the cross-section area of the web. It is important not to approach the yield stress limit of a web in any zone in a converting machine. The recommended operating stress for most web products is between 5 and 10% of its yield stress.

Surface Roughness Projections on the web surface (asperity) that keep a large percentage of the web surface area from touching another surface area, including another area of the same web as when the web is wrapped into a roll. Measuring devices usually read out two variables, height and density of the surface asperity. The height is usually indicated in ranges of parts of microns. The density may be indicated in counts/cm.^{2} A medium surface roughness is one with 5 to 10 asperity counts/cm^2 of asperity height near 1 micron and the balance of that area averaging about 0.225 microns in height. A smooth clear web may have a high density of asperity height at 0.01 microns.

TD Wrinkles Wrinkles that are oriented transversely across the web. Wrinkles of this type may occur as the web wraps buckle as they are moved toward the core when the entrapped boundary air escapes from between the wraps during and after the winding process.

They also can occur when the core collapses from excessive radial compression from the wound wraps.

Tapered Tension The process of reducing winding tension according to a desired program as the winding roll builds diameter. The web tension is sensed, usually by a load-cell roller or a dancer roller, and the sensing roller sends a signal to the winder drive motor to keep the web tension equal to a programmed decreasing reference point. The reference signal control program must receive a signal that indicates the winding roll diameter. An encoder is normally used to monitor the position of the sliding frame assembly that holds the pivoting lay-on roller and sends the signal to the reference tension controller. Normal decreasing taper tension is in the range of 20 to 30%.

Tension Isolation The process of keeping the web tension at the desired level in a controlled machine zone. Two isolation sections and a sensing roller are required for each span that is to be controlled. Tension may be isolated with nests of driven rollers, nip rollers, vacuum rollers, and vacuum belts. See Chapter 2.

Tension Members An imaginary, helpful visualization of the web material for trouble-shooting purposes. The web is viewed as being made up of very thin strings or ribbons that are attached to each other but are still able to act independently from each other. This method of looking at the web can help you understand the behavior of webs that are acted on by different vectored tracking forces that may occur on the same roller surface.

Tension Profile of Roll The graphic history of film web tensions for a given time period, such as from roll start to full roll. This history is beneficial in trouble-shooting winding problems. It is very helpful to review records of problem rolls when trying to determine the cause of a winding defect.

Tension Regulation The process of keeping the web tension within the desired limits by adjusting the speed of the tension isolation section at the end of the web span under control. Good tension isolation requires a very responsive motor drive control and sensitive feedback control from either the load-cell roller or dancer roller sensor.

Tensile Strength The ability of a material to resist applied force such as web tension. The tensile strength of a material is usually available from the supplier or from material handbooks. The tensile strength usually indicated in handbooks is the ultimate or breaking strength. Handbooks indicate the stress/strain modulus of the material.

Tension Control The use of a feedback sensor (load-cell roller or dancer roller) to send a signal to the tension isolation section's drive motor control panel for matching that signal with a reference signal. The tension reference signal may be programmed to decrease or increase over the time interval, such as when winding from roll start to roll finish. Increasing web tension during winding roll buildup is not recommended.

Tension Member Resistance Forces Film web forces that oppose the roller tracking forces.

Torque Control An open-loop system where the drive motor current remains constant and the motor produces constant torque on the winder shaft. The in-feed web tension decreases as the winding roll builds diameter. This is a very stable drive system but usually results in a very loose wind when roll diameters become large.

Tracking Friction Forces that are applied to the web surface by the surface of a support or guide roller as that roller turns. These forces always act on the web at right angles to the roller axis in the cross-section where the web touches the roller. Tracking friction is reduced by boundary air entrapment between the roller and web surfaces. Tracking friction is improved by using textured surfaces on the guide rollers.

Web Skew A condition for a given length of web where one edge is longer than the other edge. A skewed web will form a large circle when laid flat on a flat surface. Also, a skewed web will have a nonuniform transverse tension profile as it runs through the machine. Skewed thin extensible webs will not run flat on guide rollers when the web tension is increased.

Web Spreading The use of roller tracking devices or other methods to make the web lay flat as it is pulled through the machine. See Chapter 4.

Winding Technology The technology for wrapping a required length of web on a cylindrical core until it forms a roll of the desired diameter at the desired speed and web wrap quality. See Chapter 8.

Web Tension Profile A graph of the forces that act on the web tension members in any one zone during machine operation. Skewed webs exhibit skewed tension profiles when they are placed under tension in a thread path. Flat webs exhibit a flat tension profile under tension.

Vacuum Rollers Specially built rollers that have a section of the surface that can operate at lower than atmosphere pressure (vacuum) when webs are threaded around them. These rollers are often used for tension isolation in film-handling machines because they can develop high friction forces with the web surface.

Yield Stress Limit The point that a material will begin to elongate (continue to stretch) some measurable distance with no further load applied to the material sample. The yield stress limit in most plastic webs is usually reduced as web temperature rises. A reduced stress limit means that the web will deform with less tension at higher web temperatures.

Appendix

Calculation of HP required to keep web taut on first rollers of converting machine with loosely wound supply roll.

The example below is a nominal 28 inch diameter supply roll that has been loosely wound. The roll weighs 1000 pounds and is running at 600 ft/min. Droop of 0.125 inches and 0.500 are examined. These calculations assumes zero slack in gears and chucks.

The slowest rotational velocity is when the maximum roll droop is aligned with point Z at 90 degrees from point O.

Length of outside wrap, $S_{ox} = r\ \theta$ for surface from point O to point X. $S_{ox} = 14 \times \pi = 43.982$ inches.

Length of outside wrap, $S_{XY} = 2 \text{ x } ((r_X + r_Y)/2) \times \pi/2)$ from point X to point O = 44.375 inches.

Length of outside wrap, $S_{XY} = S_{YO} = 22.187$ inches.

Web payoff velocity is constant at $V = (600 \times 12)/60 = 120$ inches per second.

Rotational velocity, ω_{OX} for roll when point D travels from X to O = 120 (in/sec)/14 in = 8.571 radians/sec.

Rotational velocity, ω_{OZ} when point D travels from point O to point Z = Ave. $\omega_{OZ} = (\omega_O + \omega_Z)/2 = 8.496$ radians/sec.

Time, t for point D to move from point X to point O = $t_{XO} = 43.982/(14 \times 8.571) = 0.367$ sec.

Time, t for point D to move from point O to point Z= $t_{OZ} = 22.187/(14.125 \times 8.533) = 0.184$ sec.

Deceleration of roll, α_{OZ} when point D travels from O to Z = $\alpha_{OZ} = 2 \times ((\omega_{average} - \omega_O)/t) = -0.413$ in/sec^2.

Payroll roll rotational inertia, $I_c = (^1/_2\ m) \times (r_1^2 + r_2^2)$, $r_1 = 3.50$ inches, $r_2 = 14.00$ inches, m = 1000/386 slug (in/sec^2) = 2.591 slug (in/sec^2), m/2 = 1.295, $r_1^2 = 12.250$, $r_2^2 = 196.00$, $I_c = 269.754$ slug (in/sec$_2$).

Average torque, L required to decelerate roll when point D moves from point O to point Z = $L_{OZ} = I_{rotating\ parts} \times \alpha_{average} = 269.754 \times (-0.413) = -111.420$ in #s.

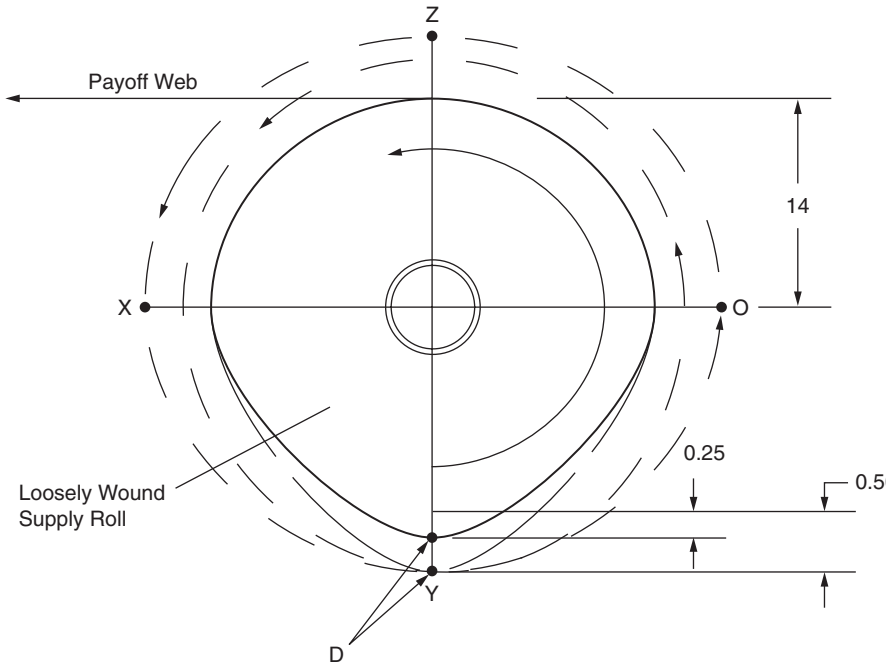

Figure A1 Calculation of HP required to keep web taut on first rollers of converting machine with loosely wound supply roll.

$RPM_{average}$ = line speed/length of web around roll = (600 × 12/88.356 = 81.489 rpm.

Horsepower required to decelerate, hp = (–111.420 × 81.489)/5252 = –1.73. Horsepower to accelerate the roll is the same except in sign.

Since the motor is running in regeneration, the system must be able to dissipate about ¾ kilowatts additional heat energy when the motor is used to keep the web taut on the guide rolls.

When the droop is 0.500 inches, the same arguments yield about –3.378 hp to decelerate the roll with 2½ kilowatts of additional heat. About ½ kilowatts of heat dissipation must be factored in to accelerate/decelerate the other rotating parts in both of the above examples. If the mandrel has bout 0.125 inches eccentricity, add about 1¾ more kilowatts heat.

Effect of gauge bands in wound rolls:

I. All air removed — wound in vacuum — only one gage band
II. I MIL Polyester, SY = 13,000 PSI
III. 16″ OD Roll
IV. 8″ Core

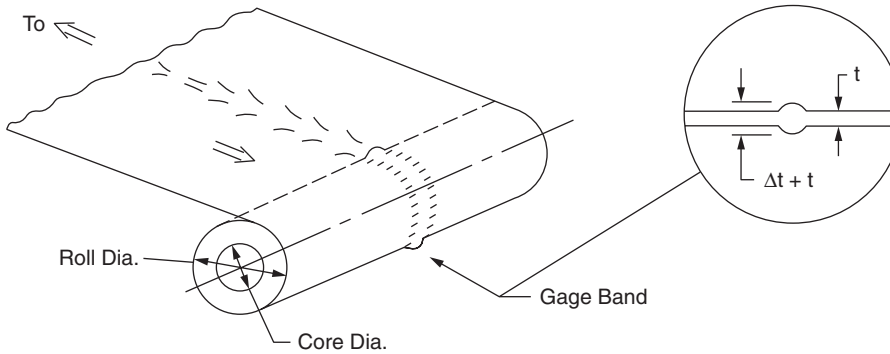

Figure A2 Effect of gage bands.

Max TD gage variation w/o permanent deformation for 16″ OD roll W/8″ Core is 5.2%.

Note: Max % gage w/o permanent deformation depends only on size of roll.

Eq. 1

$$\% \text{ Gage}_{max} = \frac{100 D_R S_y}{M(D_R - D_C)}$$

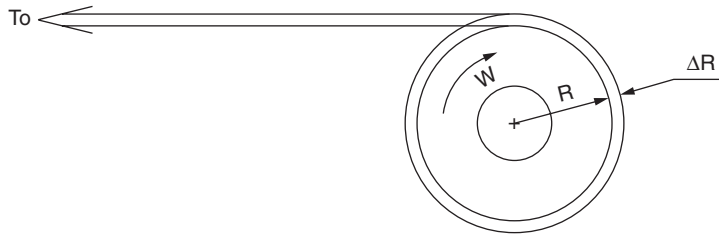

Figure A3 Tension increase at gage band assumptions: (1) Winding below yield stress at band (2) nominal 16″ OD roll (3) 5% gage variation.

Eq. 2

$$\frac{(\Delta T = M\Delta t(D_R - D_C))}{2R}$$

Max tension for example is 12.5 PLI.

Index

A

Actuators
  attaching for use in steering, 54
  pressures of, 21–22
Air actuators, 46
Air bars, 137–138
Air pressure
  operating web tension and, 34
Air rolls, 137–138
Air-bearing spreading, 46
Air-bladder mandrels, 108
Alignment, 5, 144–145
  of dancer-roller systems, 35
  of lay-on rollers, 116
Angled opposed-edge nip rollers, 46–47
Anvil rollers, 73
  overspeeding and, 76–78
Arc diameters, 10

B

Bag filters, 96
Baggy-edge web
  causes of, 12
Base web skew, 143
Bearing blocks, 7
Bell edges, 67–70
Belt equation, 29
Bevel blades, 69
Bladders in storage bins, 96
Blade fouling, 71
Bleed trim
  automatic thread up of, 88–89
  removal, 76
Blowers
  sizing, 95
Boundary air
  calculating, 28
  entrapment of, 100–101, 153
  exclusion, 115–116
  for bowed rollers, 46
Bowed rollers, 143–144
  lay-on, 123–124
  spreader, 44–46
Breaker bars, 134
Bridging, 96
Brittle products
  slitting and, 78
Buckle, 16–17
  vacuum rollers and, 30
Bulk density of waste products, 92
Bumps
  created by contact pressure, 69
Bypass air separation, 92–94

C

Caliper variation, 99–102, 129. See also gage variation
Cantilevered support arms
  vibration of, 109
Cast films
  wrinkle problems of, 146
Cast webs
  slitting non-oriented, 70
Casting machines
  windup oscillation on, 102–104
Charge buildup theory, 59–62
Chop-conveying pipes, 91–92
Choppers, 84–85
Chucks
  alignment of, 115
  vibration of, 109
Clear film issues, 130–131

Coated low-strength films, issues with, 135–139
Coating machines, 55, 137–138
Coating thickness, nonuniform, 143
Coefficient of friction, 129
Cold flow, 78
Column failure, 11
Compression pressure, effect of increased, 68
Concave roller surfaces, 36, 43–44, 143–144
Contact pressure
  bumps and knots created by, 69
Contamination generation
  razor blade thickness and, 71–72
Converting machines
  effect of vibration on, 109–114
  rigidity of, 109
  unwind oscillation on, 104–106
Cooling contraction
  scratches caused by, 149
Core hardness
  limitation of stack compression by, 130
Cores
  precision, 117
  selecting, 106–107
Counter moments, 24
Creep, 148
Crown profiles
  elastomer-covered rollers, 21, 27
Crush
  slitting to avoid, 78
Curl
  calculating, 14–16
  flatness problems caused by, 151
  in laminated web products, 132–135
  problems, 150
Cyclone air separator
  fundamentals of, 95–96

D

Dancer-roller systems, 33–36, 53
Debris generation, 71–72
Deflection, 21, 135
  calculating for a three-roller nip system, 26
  calculating for two-roller nip systems, 23
  calculating for vibration in converter machines, 109–114
Design nipping pressure, 21
Dielectric materials, charge buildup on, 59
Dipoles, 61
Discharge arcing, 60
Distorted web
  causes of, 6
Drums
  web heating, 5
Drying ovens, 8–9, 137
  web steering problems due to, 146–147

E

Edge knurls
  winding with, 131–132
Edge sensors, 51–53
Edge thickening
  causes of, 67, 75
Elastomer-covered rollers
  "S" wrapped driven, 27–30
  calculating bending force required to bow, 26
  nip roller tension isolation and, 21
  scratches caused by, 149
  velocity of, 24
Electric fields, 59–62
Elongation
  calculating, 133
Embossing
  three-roller nip systems and, 26
Entrapped air
  defects caused by, 100–101
Extruded plastic cores, 107

F

Field intensity, calculating, 62–63
Film web behavior
  structure and stress effects of, 7–17
Flexible-leaf spreading rollers, 47–49
Flotation ovens, 137
Flotation pressure of fluid layer, 28–29
Fluid layer thickness, 28
Flying splice, 55
Fold-over wrinkles, 11, 21, 144

G

Gage bands
  MD, 152
  randomization, 101–102
  standing, 139
  TD stretching over, 152–153
  winding tension and, 128
Gage variation, 99–102
Gap air pressure, 39
Gap winding
  TD wrinkles due to, 154–155
Glass cores, 107

Graphite fiber cores, 107
Grinders
bypass air separation around, 92–94
functions of, 94–95
Guiding devices, 7

H

Header pipes, 91–92
Helix bypass air separator, 92–93
Helper motors, 26
High asperity webs, 130
High-speed coating machines, 55
Homogeneous webs
curl problems in, 150
Horizontal thread path design of nipping rollers, 24
Hot-knife slitting, 79
Hot/cold roller machines, 12
Hydraulic actuators, 54
Hygroscopic expansion, 147

I

Idler rollers, 8
load cell, 36
Imaginary resistive tension members. See IRTM
Interlocking ability, 129
Ion generation, 61
Ironing roller method, 115
IRTM. See also RM
concept of, 3

J

Jackscrews, 24

K

Kiss shear slitting, 74–75
Knife-edge electrode, 63
Knots
created by contact pressure, 69
Knurling, 43
clear film and, 131
steering rollers and, 55
winding with, 131–132

L

Lagged rolls, 121
Laminated webs
behavior problems of, 14
issues of, 132–135
pucker problems on, 147
Laminating cooling rollers, 5
Laser slitting, 79
Lateral tracking forces, 11
Lay-on rollers
alignment of, 116–117
dynamics of, 115–122
eccentricity effects, 115
knurled metal surface, 130
MD wrinkles due to, 152
nipped, 135
optimum thread path around, 114
parameters of, 123–127
stack compression and, 119–120
textured, 121
vibration of, 109
Load bearing length, 21
Load cell rollers, 33, 36–37, 57, 127
elongation control with, 133
Low-strength films
issues with coated, 135–139
Low-tension slitting, 73

M

Machine direction oriented resistive members, 7
Machine speed, 139–140
Mandrels, 55
air-bladder, 108
eccentric bladder, 34
Mass-free-type dancer roller, 33–36
sensing, 37–39
Master reference roller, 5
MD, 7. See also machine direction oriented resistive members
alignment, 104
curl, 14, 16, 150
elongation in laminated webs, 133–134
gage variation, 139
tension, 114, 151–152
thermal expansion, 134
web tension, 9
wrinkles, 8, 12, 68, 100–101, 146, 152
caused by skew, 12
theory, 152–154
Melt extrusion, 17, 134
Metal cores, 107

Metal surface rollers
calculating deflection of, 23
nip roller tension isolation and, 21
Motors
helper, 26
torque-limited, speed-controlled, direct-drive, 24

N

Narrowing
calculating, 134
Neck-in, 17
Negative pressure for flow requirement, estimating, 82–84
Nip pressure, 119, 127
calculating, 23
lay-on, 129
Nip rollers
angled opposed-edge, 46–47
isolation, 148–149
tension isolation with, 21–25
Non-flat web
causes of, 6
Non-oriented cast webs, slitting, 70
Nuclear-powered devices, 63

O

Optical alignment, 5
Oscillation
randomizing coating gage bands with, 139
unwind, 104–106
windup, 102–104
Ovens
drying, 8–9
flotation type, 137
tenter, 12
Overspeeding, 76–78
Oversteering, 146

P

Paper cores, 106
Parabolic curves, calculating, 43
Passive static removal equipment, grounded, 62
Passive tensioning systems, 33
PE
width loss of, 19
yield stress of, 135–136
PET
hygroscopic expansion of, 147
maximum variations between web and gage band thicknesses, 100
modulus for, 18
Poisson's ratio for, 18–19
razor-slitting of, 70–71
stress/strain curve for, 17
width loss of, 19
yield point of, 7
yield stress of, 19
Pi tape, 144–145
determination of alignment accuracy with, 7
Piano wire, 63
Pillow block bearings, 7
Pivoting steering/guide rollers, 55–58, 117
Planer expansion, unequal, 147
Plastic films
yield point of, 17
Plastic webs
slitting of, 67
Plenum chambers, 137–138
Pneumatic conveying, 81–82
Pneumatic trim disposal, 89–91
Poisson's ratio
PE, 18–19
Polyethylene terephthalate. See PET
Pressure bubbles, 121–122
Profiled metal rollers, 26
Pucker problems on laminated webs, 147, 150
Pulling force, 3
Punch pattern, 93–94

R

Raised edge concept, 41–43
Raised roll edges
slitting of by razor blades, 67
Razor-blade slitting, 67
blade angles and configuration, 70–71
blade oscillation, 72
blade thickness and contamination generation, 71–72
Reference rollers, 5
Resin-coated paper cores, 107
Resistive members. See RM
Rigidity, 109
Ripples, 150
RM, 3
alignment of, 5
machine direction oriented, 7
Roll eccentricity, 116
Roller deflection, 109

Roller misalignment, 143
Rollers
"S" wrapped driven, 12, 27–30, 58
alignment of, 5–7
angled opposed-edge nip, 46–47
anvil, 73
bowed spreader, 44–46
calculating vibration of, 109–114
concave, 43–44, 143–144
dancer, 33–36, 53
elastomer-covered, 21
flexible-leaf spreading, 47–49
idler, 26
tendency driven, 8
knurled metal surfaced lay-on, 130
laminating cooling, 5, 14–17
load cell, 33, 57
master reference, 5
metal surface, 21
nip, 148–149
tension isolation and, 21–25
pivoting steering/guide, 55–58
profiled metal, 26
reference, 5
section, 5
shave of, 8
spreading, 5
steering, 55, 146–147
textured surface, 29
vacuum, 30–31
wrapping ends with masking tape, 41–43
Rotary tear knife shredders, 85–87
Rotational inertia, 35

S

"S" bend mufflers, 84
"S" wrapped driven rollers, 27–30, 58
Score slitting, 78–79
Scratch
potential, 24, 26
problems of, 148–149
Screens, 30
grinder hole size, 94–95
holes sizes for cutting/shearing chambers, 88
Section rollers, 5
Servo control units, 117–118
Shaves
mechanical expanding, 108
torque, 116–117
Shear knife
setup, 74–76
slitting, 74
Shred-conveying pipes, 91–92
Shredding, 85–88
Skew
flatness problems caused by, 151
Skewed film webs, 9
steering rollers and, 55
Skewing rollers, 145
Slip pimples, 69, 79, 121, 155
Slit rolls
gage variation in, 99–102
Slitters
unwind oscillation on converting machines, 104–106
windup oscillation on casting machines, 102–104
Slitting
blade angles and configuration, 70–71
blade oscillation and, 72–73
blade thickness and contamination generation, 71–72
bleed trim from the web, 69
hot-knife, 79
laser, 79
mitered shear, 80
razor-blade, 67
score, 78
shear knife, 74
tension effects, 73
trim disposal and, 79–84
water-extraction jet, 79
Slitting-debris particles, 68
Snail trails, 155–156
Speed issues, 139–140
Spiral-cut leaf, 48
Spreading rollers, 5
air-bearing, 46
angled opposed-edge nip, 46–47
bowed, 44–46
concave, 43–44
flexible-leaf, 47–49
raised edge, 41–43
Stack compression, 119–120
limitation of by core hardness, 130
tension induced by, 127
Static removal from webs, 62–64, 156
Steering, 51
troubleshooting problems of, 146–147
Steering rollers, 55
Stiffness, 3, 129
Storage bins, 96–98
Straightening web, 12
Strain gages, 36–37
Stretching, 79
Surface asperity, 119, 130
slip pimples and, 121

Swing arms, 35
Swinging mass, 35

T

Taper tension, 128–129
TD
  bending forces, 133
  curl, 14, 17, 133, 150
  stretching, 152–153
  thermal expansion, 134
  web tension, 151–152
  wrinkles, 100–101, 154–155
Tear knives, 85–86
Temperature
  tension limitations with, 19–20
Tendency driven idler rollers, 8
Tension
  control, 33
  distortion of resistive members by, 7
  gage band area levels of, 100
  isolation of with "S" wrapped driven rollers, 27–30
  isolation of with nip rollers, 21–25
  isolation of with three-roller nip systems, 26–27
  isolation of with vacuum belts, 31–32
  isolation of with vacuum rollers, 30–31, 73, 148
  limitations of, 17–19
  loading range for isolation, 23
  sensing, 33
  taper, 128–129
  winding, 127
Tension members, 3
Tensioning device, 35
Tenter-frame machines, 12, 151
Textured surface rollers, 29
  dancer rollers, 36
Thermal expansion
  scratches caused by, 149
Thermoplastic webs
  straightening and flattening, 12
Thickening
  causes of, 67
Thread path design, 8, 24
  dancer-roller systems, 33–36
  for bowed spreader rollers, 44
  optimum paths around lay-on rollers, 114
Thread up, automatic, 88–89
Three roller nip systems
  calculating deflection for, 26
  embossing, 26
  reduction of scratches by use of, 149
Tin canning, 152
Torque
  controlling winding with, 128
Torque shafts, 116
Torque-limited, speed-controlled, direct-drive motor, 24
Torsion shafts, 22
Tracking friction, 3
Tracking roller force vector, 5
Transverse direction. See TD
Transverse grooves, 55
Traveling wrinkles, 11
Trim choppers, 84–85
Trim shredding, 85–88
Trim takeoff systems, 79–84
  pneumatic, 89–91
Trim tubes, designing, 82–84
Trunnions
  calculating the moment of, 23
Tungsten carbide, use of as slitting blade, 71
Turning rolls, 137–138

U

Understeering, 146
Unwind oscillation on converting machines, 104–106
Unwind stands, 35, 37
  lateral shifting of, 51–55

V

Vacuum belts, 31–32
Vacuum rollers, 30–31
Vertical thread path design of nipping rollers, 24
Vibration
  effect on converter machines, 109–114
Vibrators, 96
Volume storage grooves, 29–30

W

Water-extraction jet slitting, 79
Waves, 150
Ways, 54–55
Web distortion, 143
Web edge sensors, 51
Web edge stability, 53
Web flatness problems, 150–152
Web guides, 5
Web guiding, 51
Web heating drum, 5

Web interlocking, 121
Web processing tension
  calculating, 17–18
Web skew, 143
Web slip, 23
Web spreading
  during winding, 135
  increased diameter under web edges, 41–43
Web strength issues, 139
Web thickness
  calculating optimum, 99
Web-handling machines
  design of, 6
Web-steering problems, 146–147
Web-width loss, 136–137
Width reduction, 17
Winders
  casting machine oscillation and, 102–104
  eccentricity on chucks, 115
Winding
  web spreading during, 135
  web strength issues and, 139
Winding defects, 68
  gage band randomization to minimize, 101–102
  knurls, 131–132
Winding process
  variables affecting, 128–129
Winding roll
  effects of baggy edges on, 14
  MD wrinkles caused by skew on, 12
Winding tension, 127
Windup stands
  lateral shifting of, 51–55
  vibration of, 109
Wobble, 116
Wound-in web tension, 127
Wrap angle, 24, 30, 36
  on bowed spreader rollers, 44
  on concave rollers, 44
Wrap shear slitting, 74–75
Wrap tension, 130
Wrinkles, 11
  MD
    caused by excessive gage variation, 100–101
    caused by skew, 12
  short length diagonal due to excessive gage variation, 100
  TD
    caused by excessive gage variation, 100–101
  tracking on direct-driven rollers, 136
  troubleshooting problems of, 143–146

Y

Yield point, 7
  plastic films, 17
Yield stress
  calculations for plastic films, 19
  gage band thickness and, 100
  of coated low-strength films, 135–136